空气传动技术专家

Air Transmission Technologies Experts

Three leaf Blower

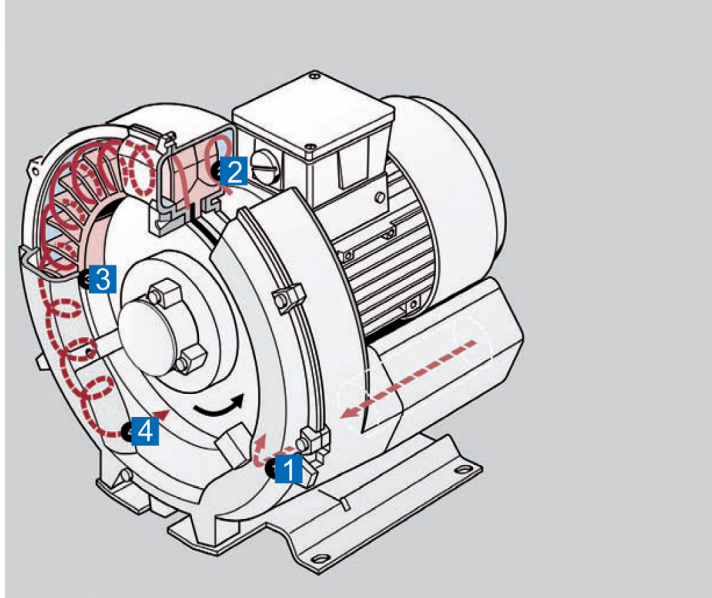

工作原理

气体由吸气口1吸入，当它进入侧通道2以后，旋转叶轮3在旋转方向上给气体一个速度，同时叶片上的离心力使气体向外加速并压力增加，随着旋转的进行，气体的动能增加，使得沿侧通道的气体压力进一步增加。随着侧通道在出口处变窄，气体被挤出叶片并通过出口消声器4排泵体。

叶轮直接安装在电机转子上，是完全地无接触压缩。由于泵轴承安装在压缩腔外，所以即便工作在最大的压差下，也能确保机器的最大工作可靠性。

Operating principle

The gas is taken in through the inlet (1). As it enters the side channel (2), therotating impellor (3) imparts velocity to the gas in the direction of rotation.Centrifugal force in the impellor blades accelerates the gas outward and the pressure increases. Every rotation adds kinetic energy, resulting in further increase of pressure along the side channel. The side channel narrows at the rotor, sweeping the gas off the impellor blades and discharging it through the outlet silencer (4) where it exits the pump.The impeller is mounted directly on the motor rotor is completely non-contact compression. Maximum differential pressure, the pump bearings installed in the compression chamber, so even work canEnsure maximum reliability of the machine.

应用

•钢铁冶金，农业生态工程，干燥设备，工业燃烧器；
织袜机，化工/制药，包装设备；
净化设备，新能源及生物设备，酿造及灌装机械；
牛奶及奶制品，工业洗涤机，机械手的真空搬运；
工艺装置和机器，航海；
塑料机械，丝网印刷，纺织吸丝，气力输送，
废物处理和处置等等。

Applications

• Steelworks, agricultural machineries, drying process, industrial burners, hosiery machines, stationery, chemical/pharmaceutical, packaging/bottling process, water depuration, energy plants and machines, oenology and similar, milk and dairy process, industrial laundries, manipulator/handling machines, medical plants and machines, precious metals process plants and machines, nautical, plastic, serigraphy, aspirating tables, textile, pneumatical conveyors, waste treatment and disposal.

TB侧通道式鼓风机型号表示方法：
Side channel blower reading legend

4	TB	50	2	SG	040	T

4 无记号：表示G-200系列；4：表示G-400系列

TB 三叶侧通道鼓风机
The clover side channel blowerr

5 泵体尺寸大小，不涉及风机安装尺寸
Size, not related to blower components dimensions

02 01. 单级叶轮；02. 双级叶轮；03. 单级大流量；05. TB7大流量型
Stages number

SG 段数配置：MG=单段，PG=双级并联；SG =（双）多级串联
Stages confguration: MG = single stage; PG = stages in parallel; SG = stages in series

040 功率[kW] 004：0. 4KW 008：0. 85KW 040：4. 0KW 110：11KW
Installed power [kW]

T 电机相数：T =3相，M=单相
Motorphase: T = 3 phases; M = single phase

侧通道风机爆炸图

Side channel blower exploded diagram

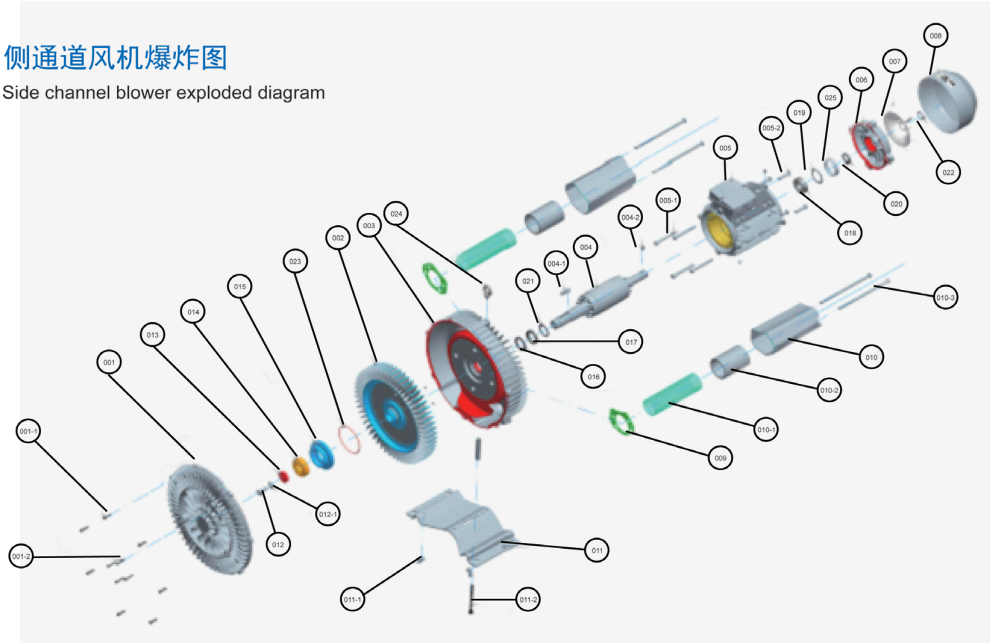

编号 Item	部件名 name	编号 Item	部件名 name	编号 Item	部件名 name	编号 Item	部件名 name
001	泵盖 pump cover	011	底座 base	021	垫片 gasket	005-2	螺钉 screw
002	叶轮 Impeller	012	螺钉 screw	022	卡簧 circlip	010-1	消音网罩 Silencer nets
003	泵体 pump cover	013	转子轴承压板 Rotor bearing platen	023	O型密封圈 O-ring seals	010-2	消音海绵 Silencer sponge
004	电机转子 Rotor	014	轴承 bearing	024	吊环 rings	010-3	螺钉 screw
005	电机 Motor	015	轴承固定座 Bearings with Housings	025	轴承包络圈 Bearing envelope ring	011-1	螺钉 screw
006	电机后盖 motor The back cover	016	毡环 Felt ring	001-1	螺钉 screw	011-2	螺钉 screw
007	风叶 Blades	017	油封 Oil seal	001-2	螺钉 screw	012-1	弹簧垫圈 Spring washer
008	风罩 Hood	018	轴承 bearing	004-1	平键 Flat key		
009	泵体出口纸垫 Pump outlet pad of paper	019	波浪垫片 Wave washer	004-2	平键 Flat key		
010	消音筒 Silencer tube	020	油封 Oil seal	005-1	螺钉 screw		

TB101MG002T
TB101MG002M

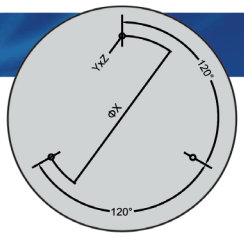

倒立安装尺寸
Connection detail

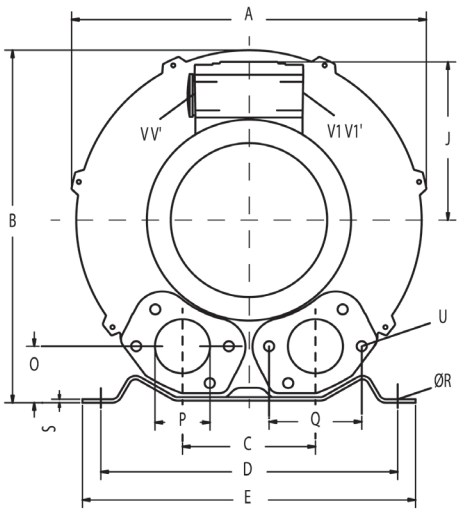

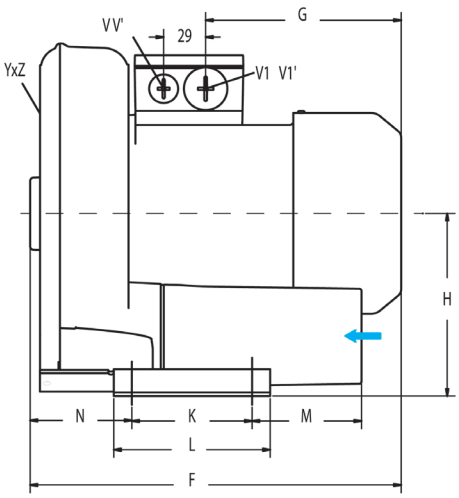

	相数 Phase	A	B	C	D	E	F	G	H	J	K	L	M	N	O	P	Q	ØR	S	U	V	V'	V1	V1'	YxZ	X-holes	ØX
TB101MG002M	1	198	212	85	179	196	220	108	115	100	65	90	40	45	34	G1"	60	8.5	2	M6x17	-	-	-	-	M6x15	0°/120°/240°	Ø114
TB101MG002T	3	198	212	85	179	196	220	108	115	100	65	90	40	45	34	G1"	60	8.5	2	M6x17	-	-	-	-	M6x15	0°/120°/240°	Ø114

曲线编号 Curve n.	型号 Model n.	频率 Frequency Hz	功率 Output power kW	电压 Voltage V	额定电流 Rated current A	噪音比 Noise dB (A)	净重 Weight Kg	最大吸/吹 MaxVacuum /Compressure mbar	最大流量 Max Volume M3/h
1	TB101MG002 T	50	0.18	200-240△345-415Y	1.0△/0.6Y	50	6	-60/70	48
2	TB101MG002 T	60	0.2	220-275△380-480Y	1.0△/0.6Y	51	6	-70/80	60
3	TB101MG002 M	50	0.18	200-240V	1.33	50	6	-50/40	48
4	TB101MG002 M	60	0.2	200-240V	1.38	51	6	-70/70	60

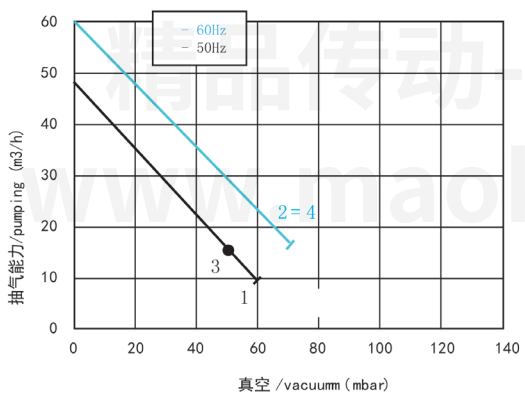

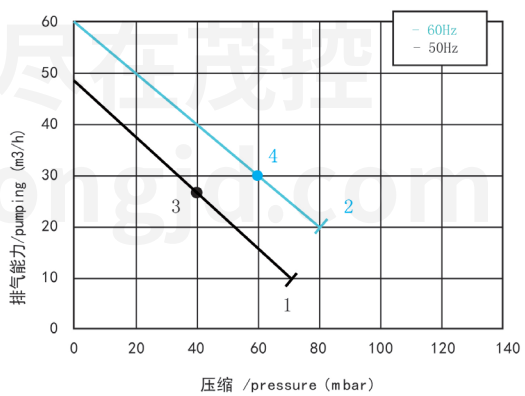

TB201MG004T
TB201MG004M

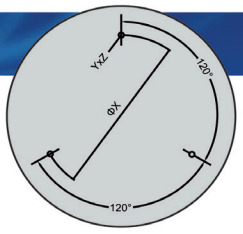

倒立安装尺寸
Connection detail

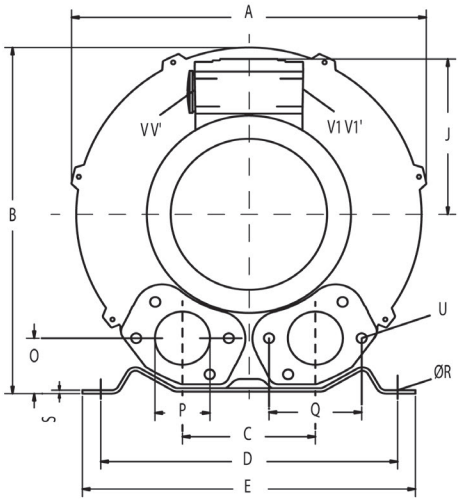

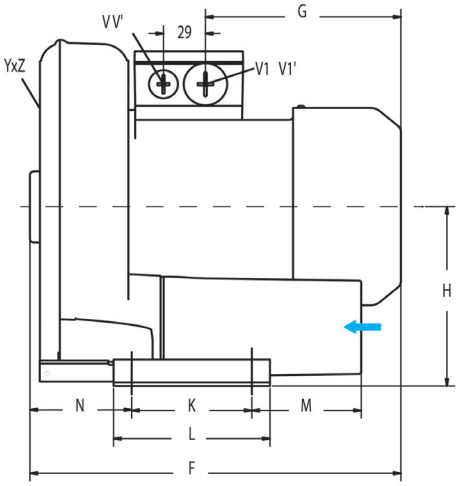

	相数 Phase	A	B	C	D	E	F	G	H	J	K	L	M	N	O	P	Q	ØR	S	U	V	V'	V1	V1'	YxZ	X-holes	ØX
TB201MG004M	1	246	247	90	205	230	256	135	128	111	83	108	75	71	39	G1"¼	64	10	2.5	M6x1 7	M16x1.5	M25x1.5	M25x1.5	M16x1.5	M6x1 5	0°/120°/240°	Ø140
TB201MG004T	3	246	247	90	205	230	256	135	128	111	83	108	75	71	39	G1"¼	64	10	2.5	M6x1 7	M16x1.5	M25x1.5	M25x1.5	M16x1.5	M6x1 5	0°/120°/240°	Ø140

曲线编号 Curve n.	型号 Model n.	频率 Frequency Hz	功率 Output power kW	电压 Voltage V	额定电流 Rated current A	噪音比 Noise dB (A)	净重 Weight Kg	最大吸/吹 MaxVacuum /Compressure mbar	最大流量 Max Volume M3/h
1	TB201MG004 T	50	0.4	200-240△345-415Y	2.6△/1.5Y	53	10	-120/130	80
2	TB201MG004 T	60	0.5	220-275△380-480Y	2.6△/1.5Y	56	10	-150/160	98
3	TB201MG004 M	50	0.4	200-240V	2.7	53	11	-120/130	80
4	TB201MG004 M	60	0.5	200-240V	3.2	56	11	-150/160	98

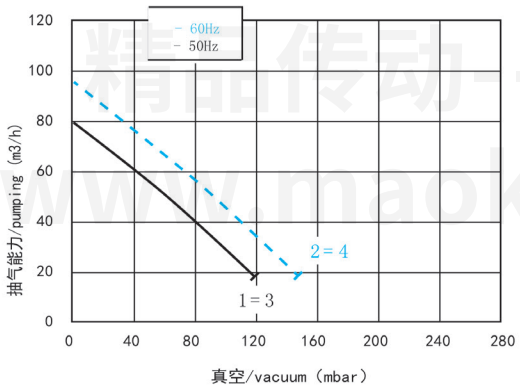

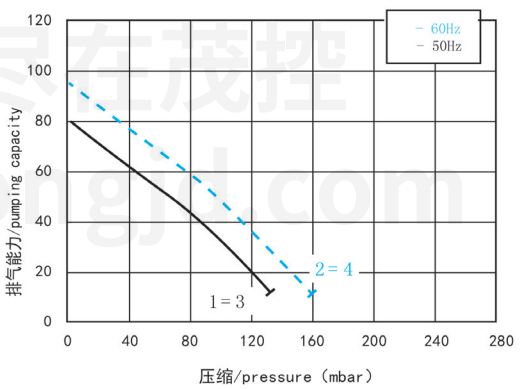

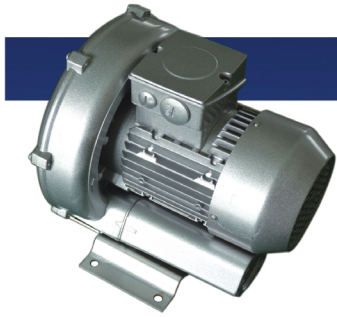

TB301MG005T
TB301MG005M

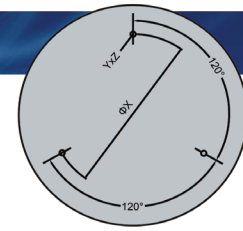

倒立安装尺寸
Connection detail

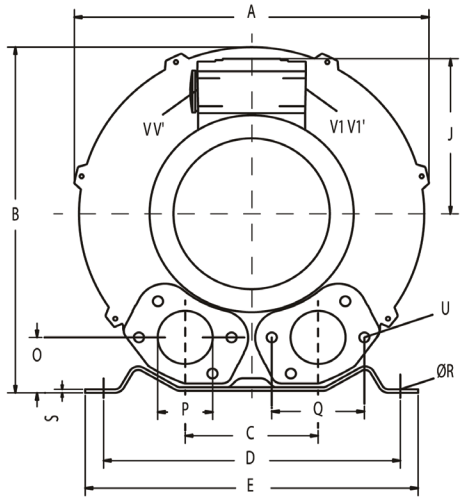

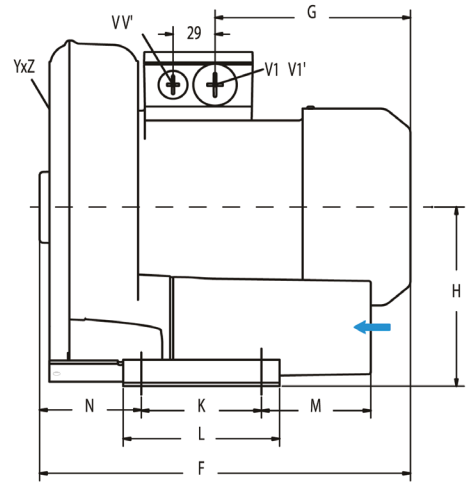

	相数 Phase	A	B	C	D	E	F	G	H	J	K	L	M	N	O	P	Q	ØR	S	U	V	V'	V1	V1'	YxZ	X-holes	ØX
TB301MG005M	1	268	272	93	205	230	260	135	141	111	83	108	82	69	41	G1"¼	64	10	2.5	M6x17	M16x15	M25x15	M25x15	M16x15	M6x15	0°/120°/240°	Ø160
TB301MG005T	3	268	272	93	205	230	260	135	141	111	83	108	82	69	41	G1"¼	64	10	2.5	M6x17	M16x15	M25x15	M25x15	M16x15	M6x15	0°/120°/240°	Ø160

曲线编号 Curve n.	型号 Model n.	频率 Frequency Hz	功率 Output power kW	电压 Voltage V	额定电流 Rated current A	噪音比 Noise dB (A)	净重 Weight Kg	最大吸/吹 MaxVacuum /Compressure mbar	最大流量 Max Volume M3/h
1	TB301MG005 T	50	0.55	220-240△345-415Y	2.4△/1.7Y	57	11	-120/130	100
2	TB301MG005 T	60	0.62	220-275△380-480Y	2.6△/1.5Y	60	11	-120/130	120
3	TB301MG005 M	50	0.55	200-240V	3.7	57	11	-120/130	100
4	TB301MG005 M	60	0.62	200-240V	4.9	60	11	-120/130	120

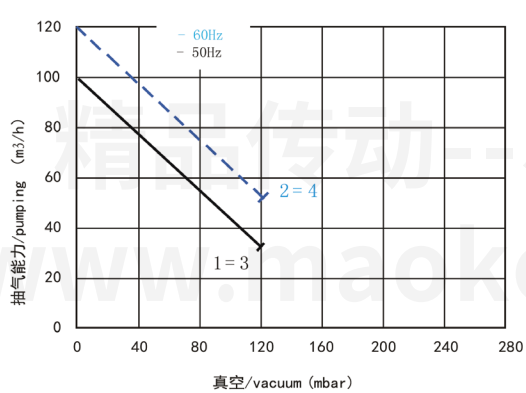

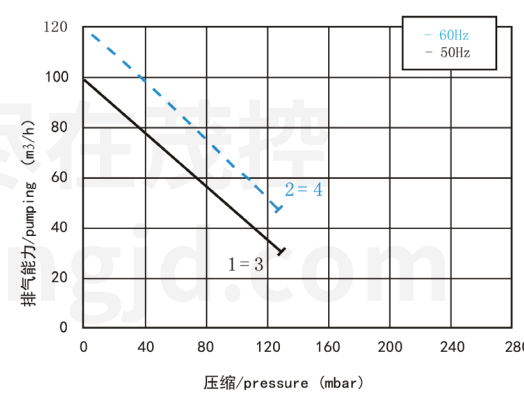

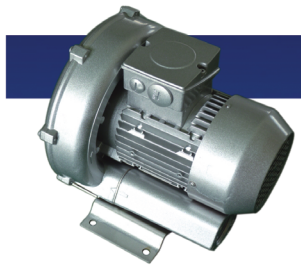

TB401MG007T
TB401MG007M
TB401MG008T
TB401MG008M
TB401MG013T
TB401MG013M

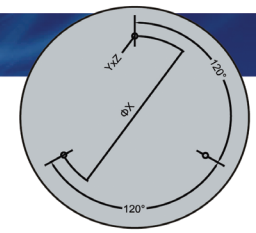

倒立安装尺寸
Connection detail

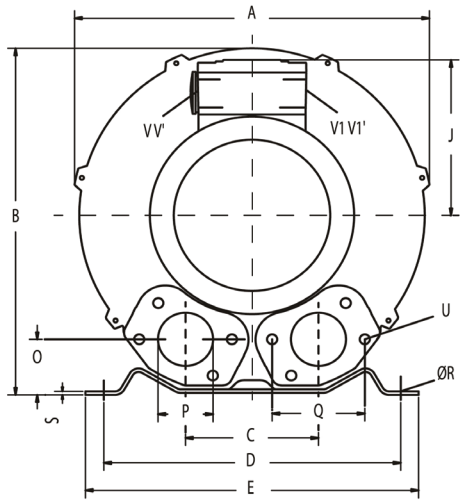

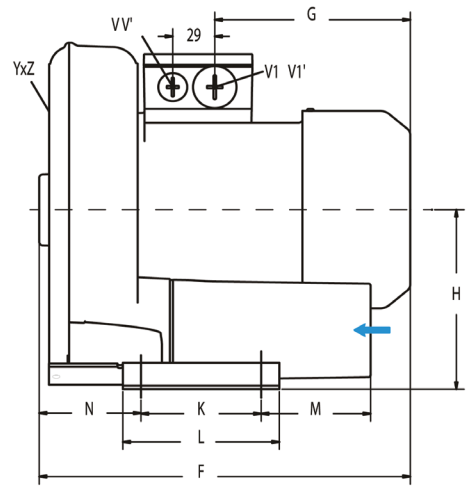

	相数 Phase	A	B	C	D	E	F	G	H	J	K	L	M	N	O	P	Q	ØR	S	U	V	V'	V1	V1'	YxZ	X-holes	ØX
TB401MG007...	1/3	285	302	115	225	255	294	160	154	120	95	130	70	75	46	G1"½	72	12	3	M6x1 9	M16x1.5	M25x1.5	M25x1.5	M16x1.5	M6x1 5	0°/120°/240°	Ø174
TB401MG008...	1/3	285	302	115	225	255	294	160	154	120	95	130	70	75	46	G1"½	72	12	3	M6x1 9	M16x1.5	M25x1.5	M25x1.5	M16x1.5	M6x1 5	0°/120°/240°	Ø174
TB401MG013...	1/3	285	302	115	225	255	294	160	154	120	95	130	70	75	46	G1"½	72	12	3	M6x1 9	M16x1.5	M25x1.5	M25x1.5	M16x1.5	M6x1 5	0°/120°/240°	Ø174

曲线编号 Curve n.	型号 Model n.	频率 Frequency Hz	功率 Output power kW	电压 Voltage V	额定电流 Rated current A	噪音比 Noise dB(A)	净重 Weight Kg	最大吸/吹 MaxVacuum /Compressure mbar	最大流量 Max Volume M3/h
1	TB401MG007 T	50	0.7	220-240V/345-415Y	3.8/2.2Y	63	15	-120/120	145
2	TB401MG007 T	60	0.83	220-275V/380-480Y	3.75/2.15Y	64	15	-130/130	175
3	TB401MG007 M	50	0.7	200-240V	4.5	63	15	-120/120	145
4	TB401MG007 M	60	0.83	200-240V	5.6	64	15	-130/130	175
5	TB401MG008 T	50	0.85	200-240 345-415Y	4.2/2.4Y	63	17	-160/160	145
6	TB401MG008 T	60	0.95	220-275 380-480Y	4.0/2.3Y	64	17	-160/160	175
7	TB401MG013 T	50	1.3	200-240 345-415Y	6.6/3.8Y	63	16	-170/200	145
8	TB401MG013 T	60	1.5	220-275 380-480Y	6.9/4.0Y	64	18	-210/220	175
9	TB401MG008 M	50	0.85	200-240V	5	63	18	-160/160	145
10	TB401MG008 M	60	0.95	200-240V	5.8	64	16	-160/160	175
11	TB401MG013 M	50	1.3	200-240V	7.3	63	17	-170/200	145
12	TB401MG013 M	60	1.5	200-240V	7.8	64	17	-210/220	175

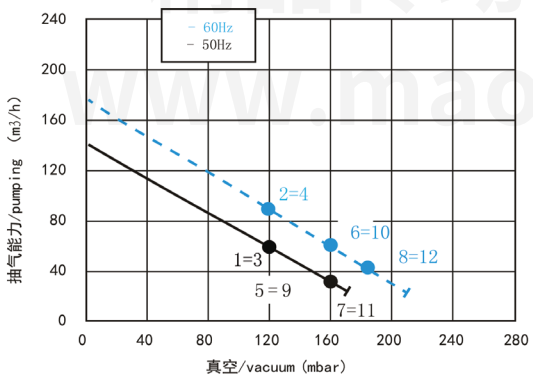

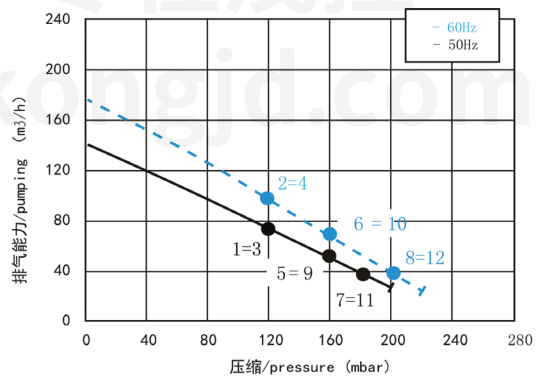

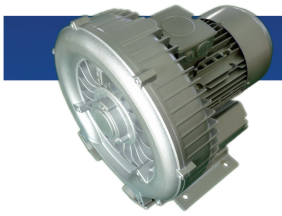

TB501MG008T TB501MG015T
TB501MG013T TB501MG015M
TB501MG013M TB501MG022T

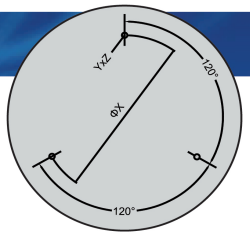

倒立安装尺寸
Connection detail

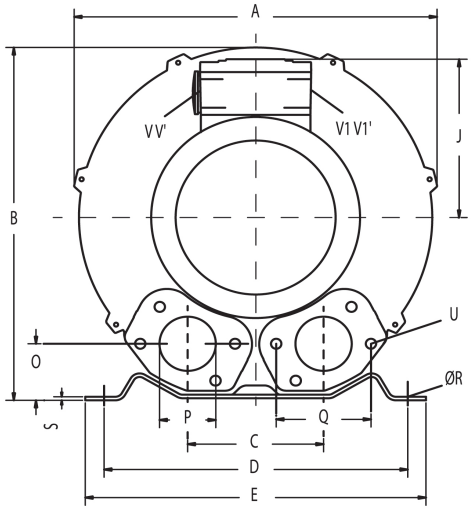

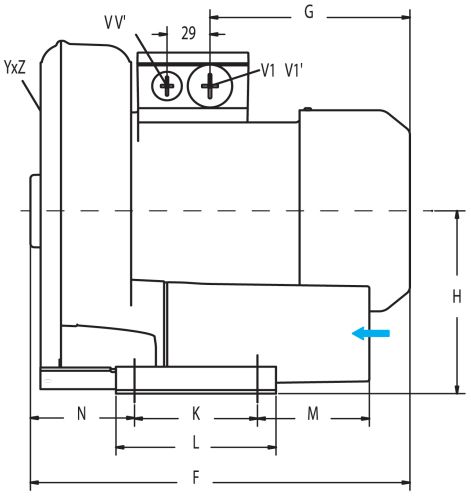

	相数 Phase	A	B	C	D	E	F	G	H	J	K	L	M	N	O	P	Q	ØR	S	U	V	V'	V1	V1'	YxZ	X-holes	ØX
TB501MG008...	1/3	334	337	120	260	295	314	156	175	128	115	155	96	87	48	G2"	83	14	4	M8 X 17	M16 X1.5	M25 X 1.5	M25 X 1.5	M16 X 1.5	M8 x 20	0°/120°/240	Ø200
TB501MG013...	1/3	334	337	120	260	295	314	153	175	128	115	155	96	87	48	G2"	83	14	4	M8 X 17	M16 X1.5	M25 X 1.5	M25 X 1.5	M16 X 1.5	M8 x 20	0°/120°/240	Ø200
TB501MG015...	1/3	334	337	120	260	295	346	188	175	128	115	155	96	87	48	G2"	83	14	4	M8 X 17	M16 X1.5	M25 X 1.5	M25 X1.5	M16 X 1.5	M8 x 20	0°/120°/240	Ø200
TB501MG022...	1/3	334	337	120	260	295	346	185	175	128	115	155	96	87	48	G2"	83	14	4	M8 X 17	M16X1.5	M25 X 1.5	M25 X1.5	M16 X 1.5	M8 x 20	0°/120°/240	Ø200

曲线编号 Curve n.	型号 Model n.	频率 Frequency Hz	功率 Output power kW	电压 Voltage V	额定电流 Rated current A	噪音比 Noise dB (A)	净重 Weight Kg	最大吸/吹 MaxVacuum /Compressure mbar	最大流量 Max Volume M3/h
1	TB501MG008T	50	0.85	200-240△ 345-415Y	4.2△/2.4Y	64	18	-110/100	210
2	TB501MG008T	60	0.95	220-275△ 380-480Y	4.0△/2.3Y	70	18	-80/70	255
3	TB501MG013T	50	1.3	200-240△ 345-415Y	6.6△/3.8Y	64	20	-170/170	210
4	TB501MG013T	60	1.5	220-275△ 380-480Y	6.9△/4.0Y	70	20	-150/140	255
5	TB501MG013M	50	1.3	200-240V	7.3	64	22	-170/170	210
6	TB501MG013M	60	1.5	200-240V	7.8	70	22	-150/140	255
7	TB501MG015T	50	1.6	200-240△ 345-415Y	7.5△/4.3Y	64	21	-200/190	210
8	TB501MG015T	60	2.05	220-240△ 380-480Y	7.6△/4.4Y	70	21	-220/210	255
9	TB501MG015M	50	1.5	200-240V	9	64	23	-200/190	210
10	TB501MG015M	60	1.75	200-240V	9.5	70	23	-220/210	255
11	TB501MG022T	50	2.2	220-240△ 345-415Y	9.7△/5.6Y	64	25	-220/270	210
12	TB501MG022T	60	2.55	220-275△ 380-480Y	10.3△/6.0Y	72	25	-260/290	255

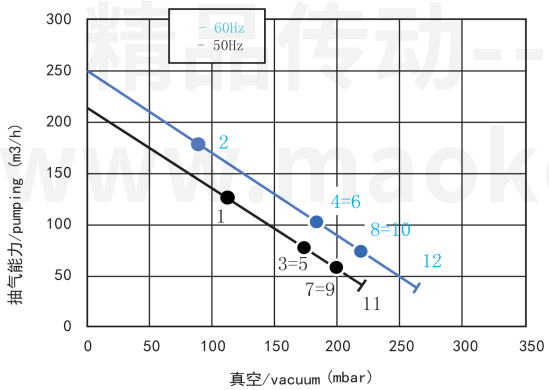

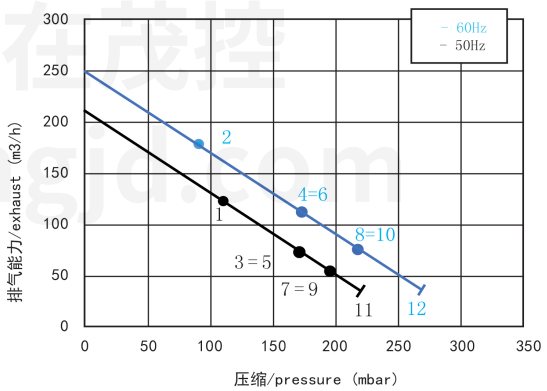

TB701MG016T
TB701MG022T
TB701MG030T
TB701MG040T

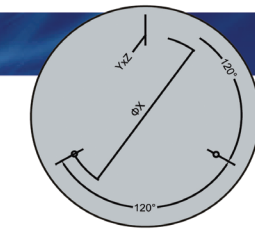

倒立安装尺寸
Connection detail

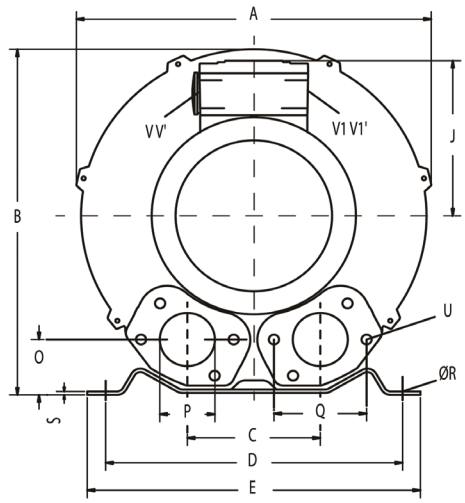

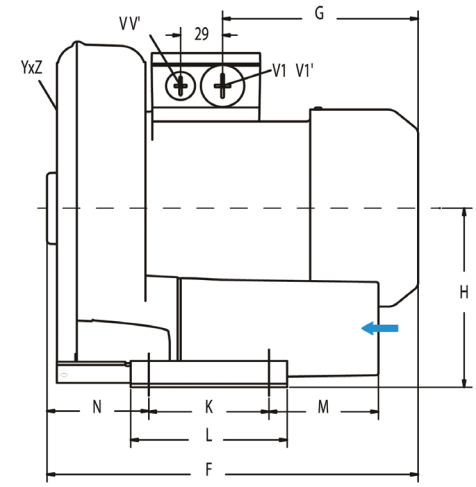

	相数 Phase	A	B	C	D	E	F	G	H	J	K	L	M	N	O	P	Q	ØR	S	U	V	V'	V1	V1'	YxZ	X-holes	ØX
TB701MG016T	3	382	384	125	290	325	377	185	197	128	140	180	84	109	54	G2"	83	15	4.5	M8x1 7	M25x1.5	M16x1.5	M25x1.5	M16x1.5	M10x2 0	0°/120°/240°	Ø240
TB701MG022T	3	382	384	125	290	325	377	191	197	128	140	180	84	109	54	G2"	83	15	4.5	M8x1 7	M25x1.5	M16x1.5	M25x1.5	M16x1.5	M10x2 0	0°/120°/240°	Ø240
TB701MG030T	3	382	384	125	290	325	409	188	197	135	140	180	84	109	54	G2"	83	15	4.5	M8x1 7	M32X1.5	M32X1.5	M32X1.5	M32X1.5	M10x2 0	0°/120°/240°	Ø240
TB701MG040T	3	382	384	125	290	325	432	209	197	148	140	180	84	109	54	G2"	83	15	4.5	M8x1 7	M32X1.5	M32X1.5	M32X1.5	M32X1.5	M10x2 0	0°/120°/240°	Ø240

曲线编号 Curve n.	型号 Model n.	频率 Frequency Hz	功率 Output power kW	电压 Voltage V	额定电流 Rated current A	噪音比 Noise dB (A)	净重 Weight Kg	最大吸/吹 MaxVacuum /Compressure mbar	最大流量 Max Volume M3/h
1	TB701MG016T	50	1.6	200-240 △345-415Y	8.5△/4.9 Y	69	27	-210/200	318
2	TB701MG016T	60	2.05	220-275 △380-480Y	8.8△/5.5 Y	72	27	-210/200	376
3	TB701MG022T	50	2.2	200-240 △345-415Y	10△/5.6 Y	69	30	-190/190	318
4	TB701MG022T	60	2.55	220-275 △380-480Y	10.3△/6.5 Y	72	30	-190/190	376
5	TB701MG030T	50	3	200-240 △345-415Y	12.5△/7.2 Y	69	36	-260/270	318
6	TB701MG030T	60	3.45	220-275 △380-480Y	12.5△/7.3 Y	72	36	-240/230	376
7	TB701MG040T	50	4	345-415△ 600-720Y	9.5△/5.2 Y	69	40	-290/330	318
8	TB701MG040T	60	4.6	380-480△ 660-720Y	9.5△/5.2 Y	72	40	-320/310	376

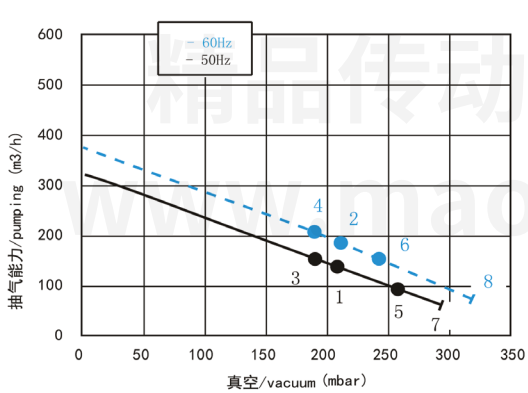

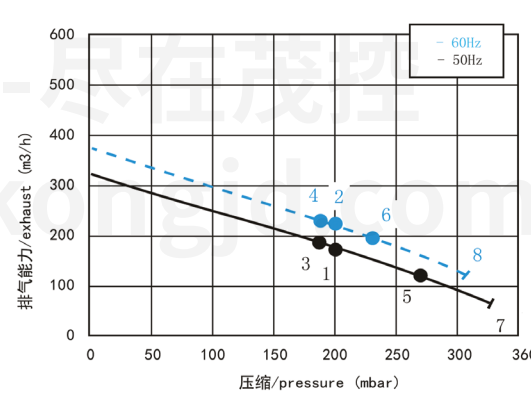

TB705MG030T
TB705MG043TH
TB705MG043T

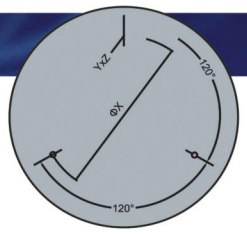

倒立安装尺寸
Connection detail

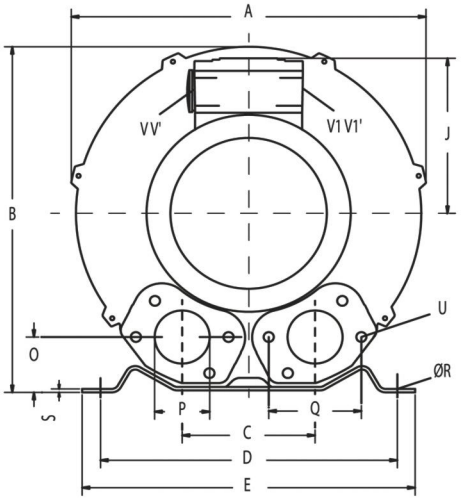

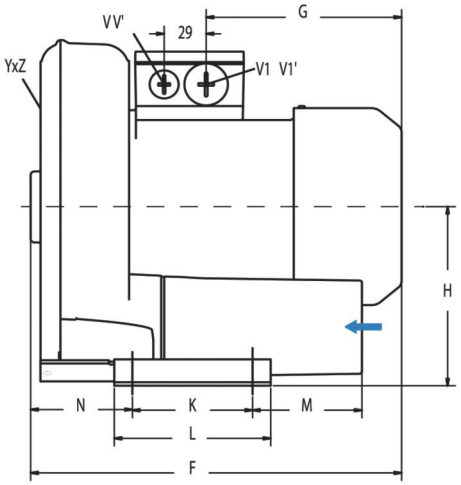

	相数 Phase	A	B	C	D	E	F	G	H	J	K	L	M	N	O	P	Q	ØR	S	U	V	V'	V1	V1'	YxZ	X-holes	ØX
TB705MG030T	3	426	447	145	305	332	437	230	243	148	155	235	128	129	45	G2 1/2	79	12	6	M8x17	M32x1.5	–	–	–	M12x20	0°/120°/240°	262
TB705MG043T	3	426	447	145	305	332	467	230	243	148	155	235	128	129	45	G2 1/2	79	12	6	M8x17	M32x1.5	–	–	–	M12x20	0°/120°/240°	262

曲线编号 Curve n.	型号 Model n.	频率 Frequency Hz	功率 Output power kW	电压 Voltage V	额定电流 Rated current A	噪音比 Noise dB(A)	净重 Weight Kg	最大吸/吹 MaxVacuum /Compressure mbar	最大流量 Max Volume M3/h
1	TB705MG030T	50	3	200-240 △ / 345-415 Y	12.5 △ / 7.2 Y	81	47	-180/170	540
2	TB705MG030T	60	3.45	220-275 △ / 380-480 Y	12.6 △ / 7.3 Y	83	47	-120/130	635
3	TB705MG043TH	50	4.3	345-415 △ / 600-720 Y	11 △ / 6.5 Y	83	50	-210/200	540
4	TB705MG043TH	60	4.8	380-480 △ / 660-720 Y	12.5 △ / 7.2 Y	85	50	-150/140	635
5	TB705MG043T	50	4.3	200-240 △ / 345-415 Y	15 △ / 8.5 Y	83	50	-210/200	540
6	TB705MG043T	60	4.8	220-275 △ / 380-480 Y	15.5 △ / 9.0 Y	85	50	-150/140	635

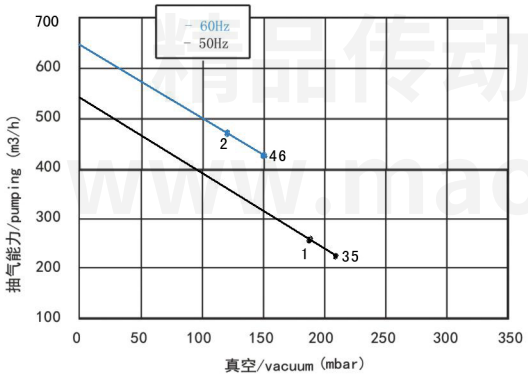

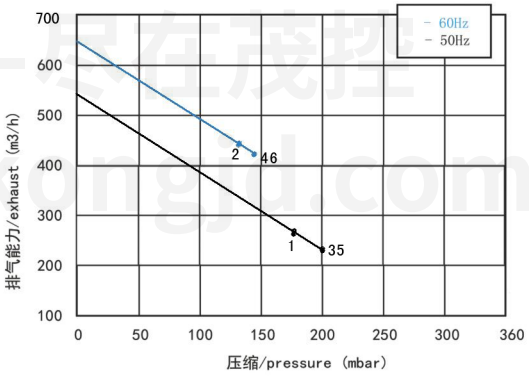

TB801MG043T
TB801MG055T
TB801MG075T

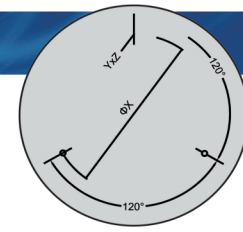

倒立安装尺寸

Connection detail

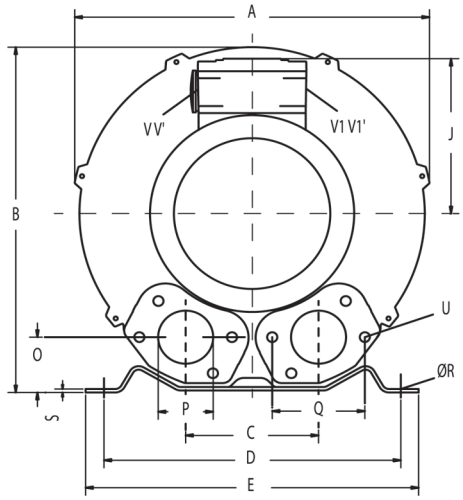

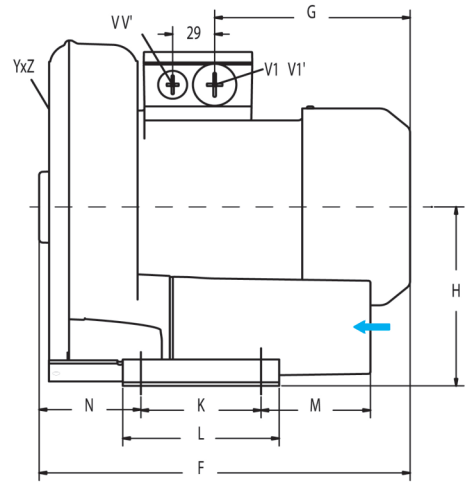

	相数 Phase	A	B	C	D	E	F	G	H	J	K	L	M	N	O	P	Q	ØR	S	U	V	YxZ	X-holes	ØX
TB801MG043T	3	451	461	152	356	394	423	226	240	167	170	2170	140	124	65	G2"½	104	15	6	M8x1 7	4xM32x1.5	M12x2 0	0°/120°/240°	Ø286
TB801MG055T	3	451	461	152	356	394	433	226	240	167	170	217	140	124	65	G2"½	104	15	6	M8x1 7	4xM32x1.5	M12x2 0	0°/120°/240°	Ø286
TB801MG075T	3	451	461	152	356	394	433	226	240	167	170	217	140	124	65	G2"½	104	15	6	M8x1 7	4xM32x1.5	M12x2 0	0°/120°/240°	Ø286

曲线编号 Curve n.	型号 Model n.	频率 Frequency Hz	功率 Output power kW	电压 Voltage V	额定电流 Rated current A	噪音比 Noise dB (A)	净重 Weight Kg	最大吸/吹 MaxVacuum /Compressure mbar	最大流量 Max Volume M3/h
1	TB801MG043T	50	4.3	345-415△/600-720Y	9.5 △/5.5Y	70	51	-200/200	528
2	TB801MG043T	60	4.8	380-480△/660-720Y	9.5 △/5.5Y	74	51	-160/160	618
3	TB801MG055T	50	5.5	345-415△/600-720Y	13.3△/7.4Y	80	62	-300/320	528
4	TB801MG055T	60	6.3	380-480△/660-720Y	13.3△/7.45Y	82	62	-320/340	618
5	TB801MG075T	50	7.5	345-415△/600-720Y	16.7△/9.6Y	80	65	-320/380	528
6	TB801MG075T	60	8.6	380-480△/660-720Y	17.3△/10.0Y	82	65	-340/400	618

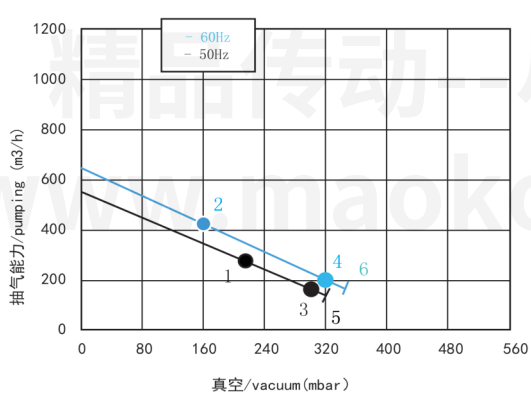

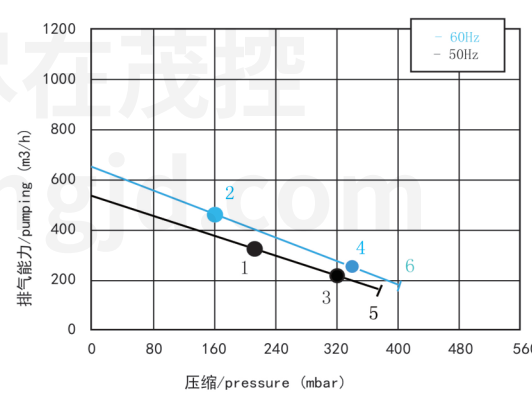

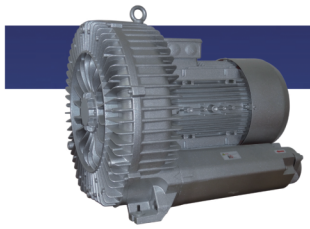

TB901MG085T
TB901MG125T
TB901MG185T

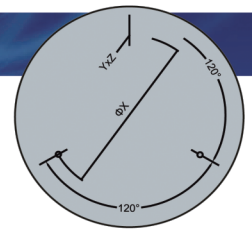

倒立安装尺寸
Connection detail

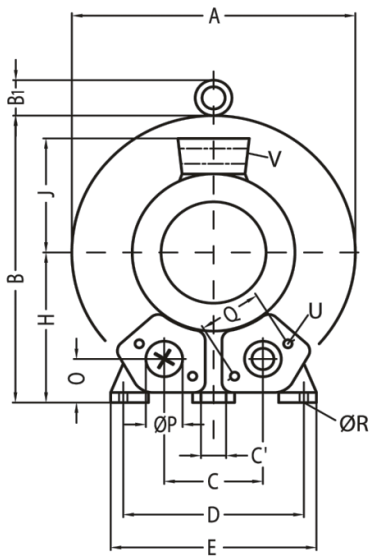

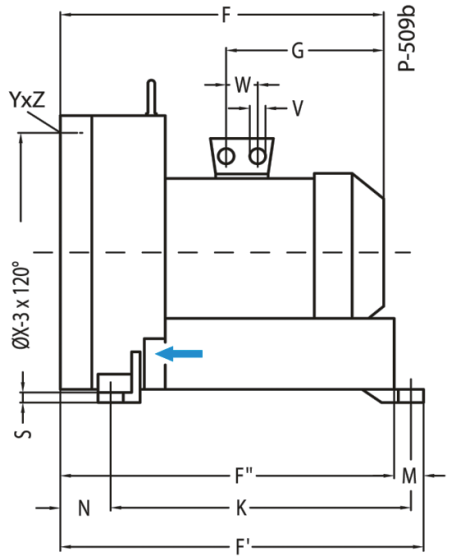

	相数 Phase	A	B	B1	C	C1	D	E	F	F'	F"	G	H	J	K	M	N	O	ØP	Q	ØR	S	U	V	W	YxZ	X-holes	ØX
TB901MG085T	3	550	569	55	207	15	360	415	525	644	605	268	300	167	533	39	89	92	G4"	150	15	21	M12x30	4xM32x1.5	42	M12x30	0°/120°/240°	Ø490
TB901MG125T	3	550	569	55	207	15	360	415	611	644	605	345	300	197	533	39	89	92	G4"	150	15	21	M12x30	4xM40x1.5	54	M12x30	0°/120°/240°	Ø490
TB901MG185T	3	550	569	55	207	15	360	415	611	644	605	345	300	197	533	39	89	92	G4"	150	15	21	M12x30	4xM40x1.5	54	M12x30	0°/120°/240°	Ø490

曲线编号 Curve n.	型号 Model n.	频率 Frequency Hz	功率 Output power kW	电压 Voltage V	额定电流 Rated current A	噪音比 Noise dB(A)	净重 Weight Kg	最大吸/吹 MaxVacuum /Compressure mbar	最大流量 Max Volume M3/h
1	TB901MG085T	50	8.5	345-415 △/600-720Y	18.2△/10.5Y	74	93	-210/210	1050
2	TB901MG085T	60	9.8	380-480 △/660-720Y	18.2△/10.5Y	79	93	-180/180	1248
3	TB901MG125T	50	12.5	345-415 △/600-720Y	28.0△/16.2Y	74	116	-280/270	1050
4	TB901MG125T	60	14.5	380-480 △/660-720Y	29.0△/16.7Y	79	116	-270/260	1248
5	TB901MG185T	50	18.5	345-415△/600-720Y	37.0△/21.0Y	74	126	-340/460	1050
6	TB901MG185T	60	21.3	380-480△/660-720Y	39.0△/22.5Y	79	126	-380/420	1248

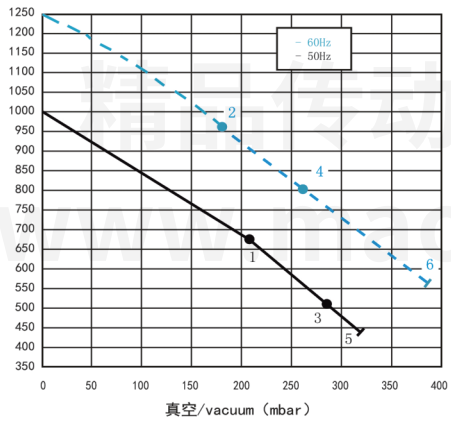

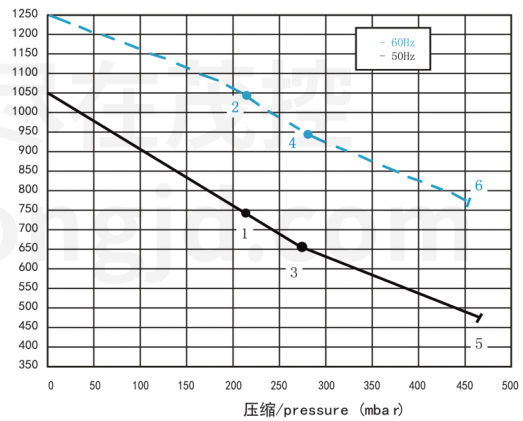

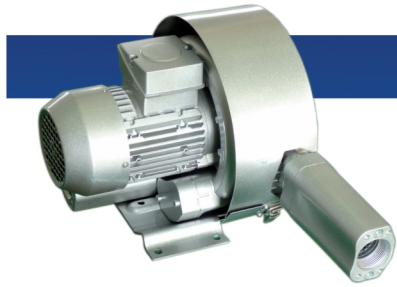

TB302SG085T
TB302SG011M
TB302SG013T

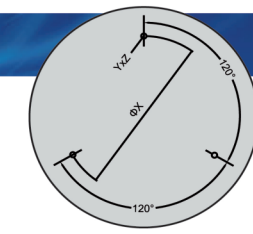

倒立安装尺寸
Connection detail

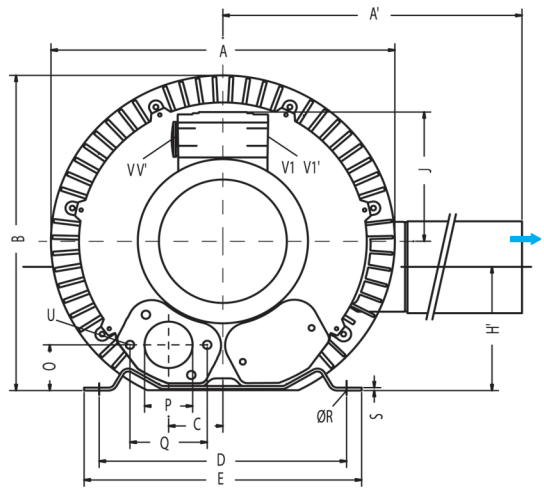

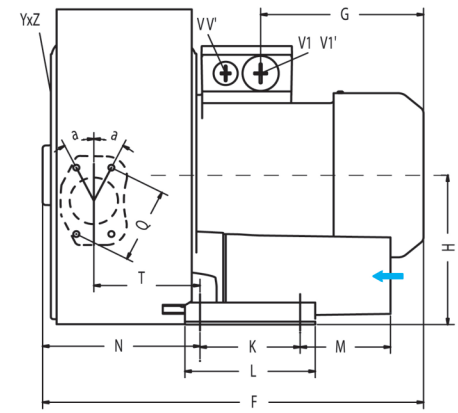

	相数 Phase	A	A'	B	C	D	E	F	G	H	H'	J	K	L	M	N	O	P	Q	ØR	S	T	U	V1	V1'	a	YxZ	X-holes	ØX
TB302SG085T	3	293	316	270	45	205	230	306	135	128	106	111	83	108	75	130	39	G1"¼	64	10	2.5	88	M6x1 7	M25x1.5	M16x1.5	27°	M6x1 5	51°/171°/291°	Ø140
TB302SG011M	1	293	316	270	45	205	230	316	135	128	106	111	83	108	75	130	39	G1"¼	64	10	2.5	88	M6x1 7	M25x1.5	M16x1.5	27°	M6x1 5	51°/171°/291°	Ø140
TB302SG013T	3	293	316	270	45	205	230	316	135	128	106	111	83	108	75	130	39	G1"¼	64	10	2.5	88	M6x1 7	M25x1.5	M16x1.5	27°	M6x1 5	51°/171°/291°	Ø140

曲线编号 Curve n.	型号 Model n.	频率 Frequency Hz	功率 Output power kW	电压 Voltage V	额定电流 Rated current A	噪音比 Noise dB(A)	净重 Weight Kg	最大吸/吹 MaxVacuum /Compressure mbar	最大流量 Max Volume M3/h
1	TB302SG011M	50	1.1	200-240V	7.3	55	18	-280/290	108
2	TB302SG011M	60	1.3	220-240V	8.3	61	18	-280/290	132
3	TB302SG013T	50	1.3	200-240△345-415Y	5.7 △/3.3Y	58	18	-280/290	108
4	TB302SG013T	60	1.5	220-275△380-480Y	6.0 △/3.5Y	60	18	-300/330	132
5	TB302SG008T	50	0.85	200-240△345-415Y	4.2△/2.4Y	58	17	-200/230	108
6	TB302SG008T	60	0.95	220-275△380-480Y	4.0△/2.3Y	60	17	-240/240	132

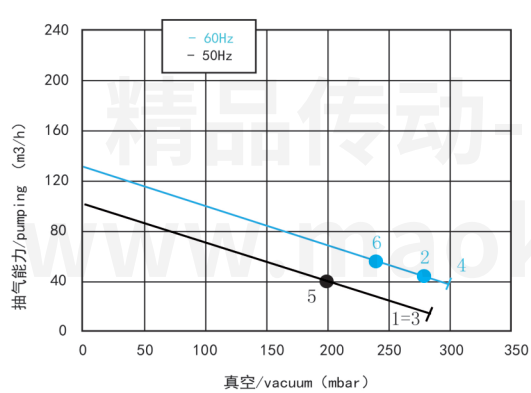

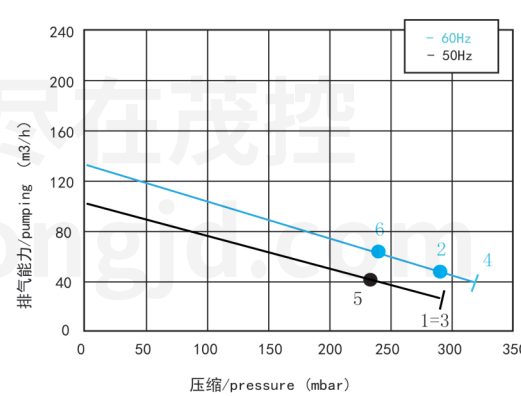

TB402SG015M
TB402SG016T
TB402SG022T

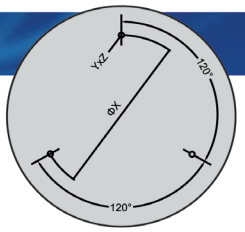

倒立安装尺寸
Connectiom detail

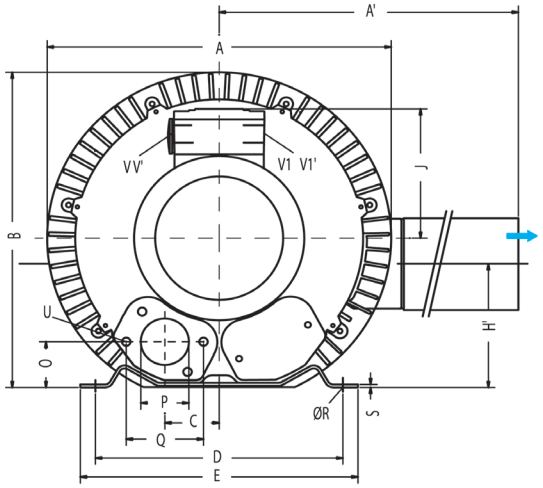

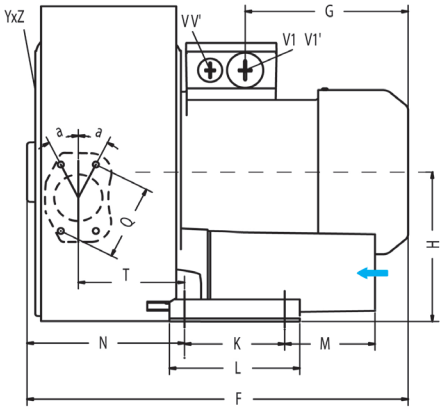

	相数 Phase	A	A'	B	C	D	E	F	G	H	H'	J	K	L	M	N	O	P	Q	ØR	S	T	U	V1	V1'	a	YxZ	X-holes	ØX
TB402SG015M	1	322	324	315	58	225	255	401	191	154	153	128	95	130	73	151	45	G1 1/2	72	12	3	104	M6 x 19	M25 1.	M16 x 1.5	28°	M6 15	51°/171°/291°	Ø174
TB402SG016T	3	322	324	315	58	225	255	401	191	154	153	128	95	130	73	151	45	G1 1/2	72	12	3	104	M6 x 19	M25 x 1.5	M16 x 1.5	28°	M6 x 15	51°/171°/291°	Ø174
TB402SG022T	3	322	324	315	58	225	255	401	191	154	153	128	95	130	73	151	45	G1 1/2	72	12	3	104	M6 x 19	M25 x 1.5	M16 x 1.5	28°	M6 x 15	51°/171°/291°	Ø174

曲线编号 Curve n.	型号 Model n.	频率 Frequency Hz	功率 Output power kW	电压 Voltage V	额定电流 Rated current A	噪音比 Noise dB (A)	净重 Weight Kg	最大吸/吹 MaxVacuum /Compressure mbar	最大流量 Max Volume M3/h
1	TB402SG015M	50	1.5	200-240V	9	66	25	-250/260	150
2	TB402SG015M	60	1.75	220-240V	10	70	25	-250/270	180
3	TB402SG016T	50	1.6	200-240△345-415Y	7.5 △/4.3Y	66	25	-280/280	150
4	TB402SG016T	60	2.05	220-275△380-480Y	7.6 △/4.4Y	69	25	-320/310	180
5	TB402SG022T	50	2.2	200-240△345-415Y	9.7 △/5.6Y	66	27	-330/440	150
6	TB402SG022T	60	2.55	220-275△380-480Y	10.3△/6.0Y	69	27	-350/420	180

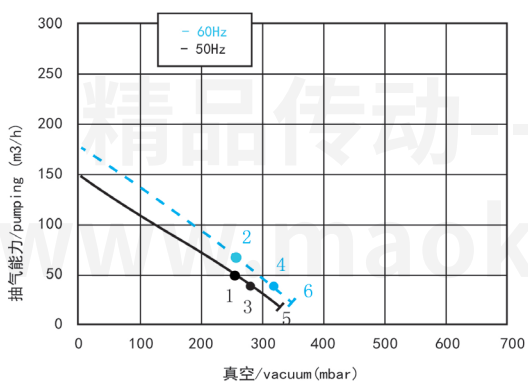

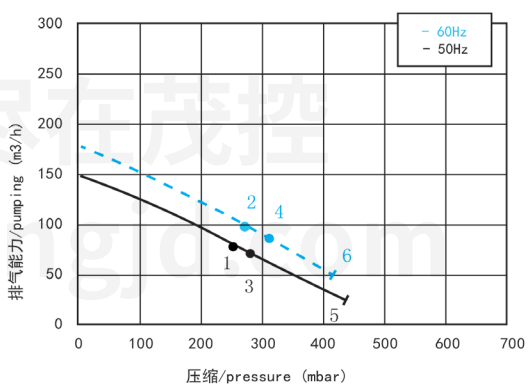

TB502SG030T
TB502SG040T

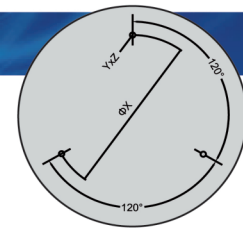

倒立安装尺寸
Connection detail

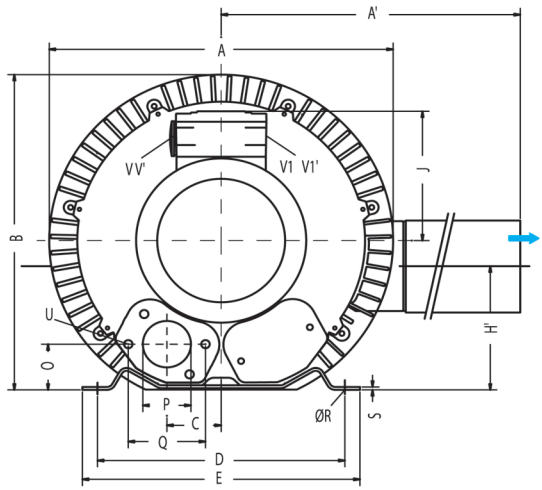

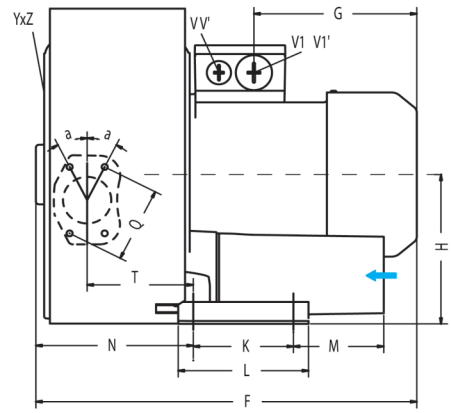

	相数 Phase	A	A'	B	C	D	E	F	G	H	H'	J	K	L	M	N	O	P	Q	ØR	S	T	U	V V' V1 V1'	a	YxZ	X-holes	ØX
TB502SG030T	3	372	411	371	60	260	295	465	190	175	144	135	115	155	98	171	48	G2"	83	14	4	116	M8x17	4 x M 32 x1.5	23.5°	M8 x 20	51°/171°/291°	Ø200
TB502SG040T	3	372	411	371	60	260	295	499	224	175	144	135	115	155	98	171	48	G2"	83	14	4	116	M8x17	4 x M 32 x1.5	23.5°	M8 x 20	51°/171°/291°	Ø200

曲线编号 Curve n.	型号 Model n.	频率 Frequency Hz	功率 Output power kW	电压 Voltage V	额定电流 Rated current A	噪音比 Noise dB(A)	净重 Weight Kg	最大吸/吹 MaxVacuum /Compressure mbar	最大流量 Max Volume M3/h
1	TB502SG030 T	50	3.0	200-240△345-415Y	12.5△/7.2Y	72	39	-340/410	228
2	TB502SG030 T	60	3.45	220-275△380-480Y	12.5△/7.3Y	74	39	-380/360	276
3	TB502SG040 T	50	4	345-415△600-720Y	10 △/5.8Y	72	44	-390/490	228
4	TB502SG040 T	60	4.6	380-480△660-720Y	9.9△/5.71Y	74	44	-410/480	276

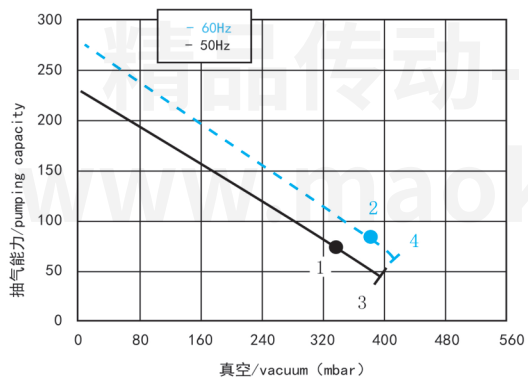

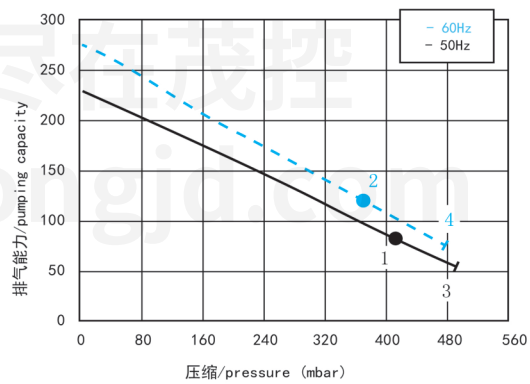

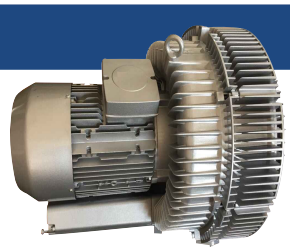

TB702PG040T
TB702PG055T
TB702PG075T

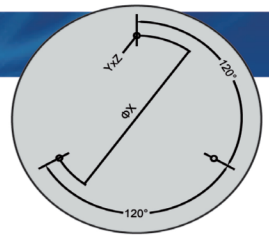

倒立安装尺寸
Connection detail

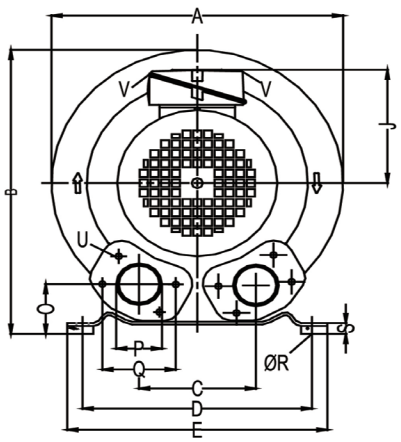

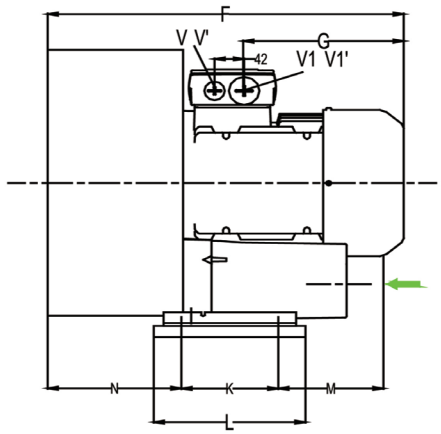

	相数 Phase	A	B	C	D	E	F	G	H	J	K	L	M	N	O	ØP	Q	ØR	S	U	V	YxZ	X-holes	ØX
TB702PG040T	3	426	410	63	290	326	526	209	197	135	140	180	205	192	197	G2"	83	15	4.5	M8x1 7	4xM32x1.5	M10x2 0	0°/120°/240°	Ø240
TB702PG055T	3	426	410	63	290	326	560	226	197	135	140	180	205	192	197	G2"	83	15	4.5	M8x1 7	4xM32x1.5	M10x2 0	0°/120°/240°	Ø240
TB702PG075T	3	426	410	63	290	326	560	226	197	135	140	180	205	192	197	G2"	83	15	4.5	M8x1 7	4xM32x1.5	M10x2 0	0°/120°/240°	Ø240

曲线编号 Curve n.	型号 Model n.	频率 Frequency Hz	功率 Output power kW	电压 Voltage V	额定电流 Rated current A	噪音比 Noise dB (A)	净重 Weight Kg	最大吸/吹 MaxVacuum /Compressure mbar	最大流量 Max Volume M3/h
1	TB702PG040T	50	4.0	345-415△600-720Y	10.0△/5.2Y	73	54	-150/140	500
2	TB702PG040T	60	4.6	380-480△660-720Y	10.4△/6.0Y	76	54	-100/90	600
3	TB702PG055T	50	5.5	345-415△600-720Y	13.3△/7.7Y	73	70	-240/260	500
4	TB702PG055T	60	6.3	380-480△660-720Y	13.3△/7.7Y	76	70	-210/200	600
5	TB702PG075T	50	7.5	345-415△600-720Y	16.7△/9.6Y	73	74	-240/320	500
6	TB702PG075T	60	8.6	380-480△660-720Y	17.3△/10.0Y	76	74	-270/300	600

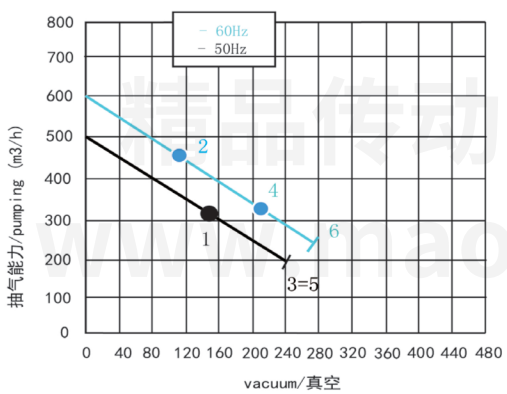

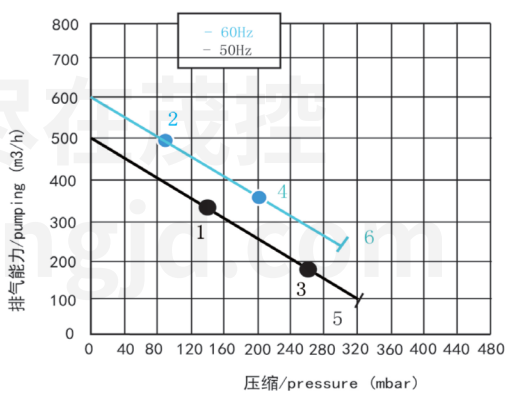

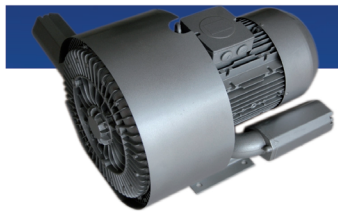

TB702SG040T
TB702SG055T
TB702SG075T

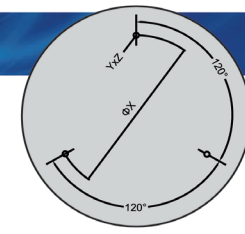

倒立安装尺寸
Connection detail

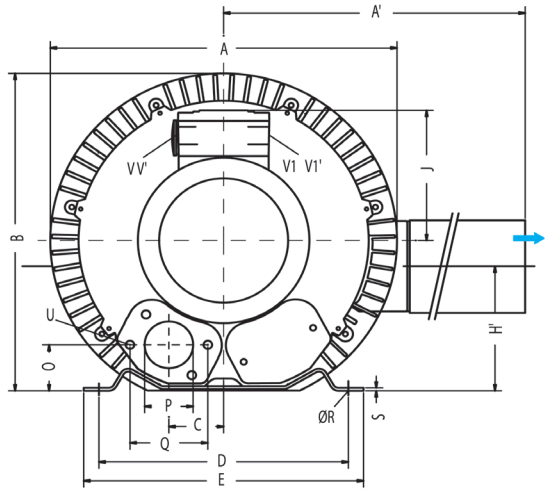

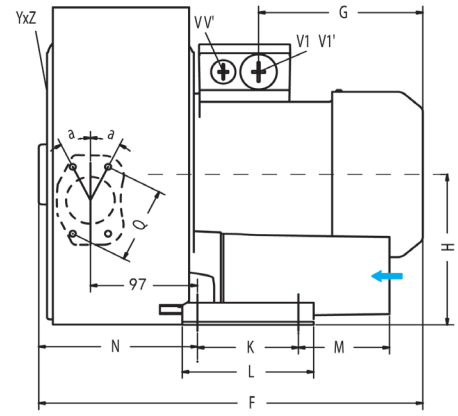

	相数 Phase	A	A'	B	C	D	E	F	G	H	J	K	L	M	N	O	P	Q	ØR	S	U	V	V'	V1'	YxZ	X-holes	ØX
TB702SG040T	3	426	426	410	154	290	326	526	209	197	135	140	180	205	192	197	G2"	83	15	4.5	M8x1 7	M32x1.5	M32x1.5	M32x1.5	M10x2 0	51.5°/171.5°/291.3°	Ø240
TB702SG055T	3	426	426	410	154	290	326	560	226	197	135	140	180	205	192	197	G2"	83	15	4.5	M8x1 7	M32x1.5	M32x1.5	M32x1.5	M10x2 0	51.5°/171.5°/291.3°	Ø240
TB702SG075T	3	426	426	410	154	290	326	560	226	197	135	140	180	205	192	197	G2"	83	15	4.5	M8x1 7	M32x1.5	M32x1.5	M32x1.5	M10x2 0	51.5°/171.5°/291.3°	Ø240

曲线编号 Curve n.	型号 Model n.	频率 Frequency Hz	功率 Output power kW	电压 Voltage V	额定电流 Rated current A	噪音比 Noise dB(A)	净重 Weight Kg	最大吸/吹 MaxVacuum /Compressure mbar	最大流量 Max Volume M3/h
1	TB702SG040T	50	4.0	345-415△600-720Y	9.0 △/5.2Y	73	54	-355/375	318
2	TB702SG040T	60	4.6	380-480△660-720Y	9.4 △/5.2Y	76	54	-345/315	384
3	TB702SG055T	50	5.5	345-415△600-720Y	13.3△/7.7Y	73	70	-440/500	318
4	TB702SG055T	60	6.3	380-480△660-720Y	13.3△/7.7Y	76	70	-440/500	384
5	TB702SG075T	50	7.5	345-415△600-720Y	16.7△/9.6Y	73	74	-440/570	318
6	TB702SG075T	60	8.6	380-480△660-720Y	17.3△/10.0Y	76	74	-460/660	384

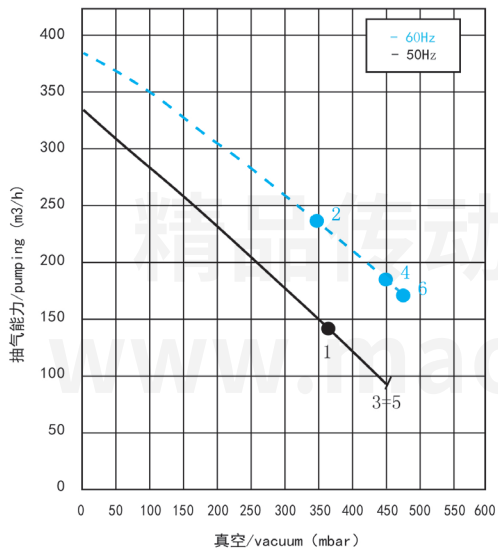

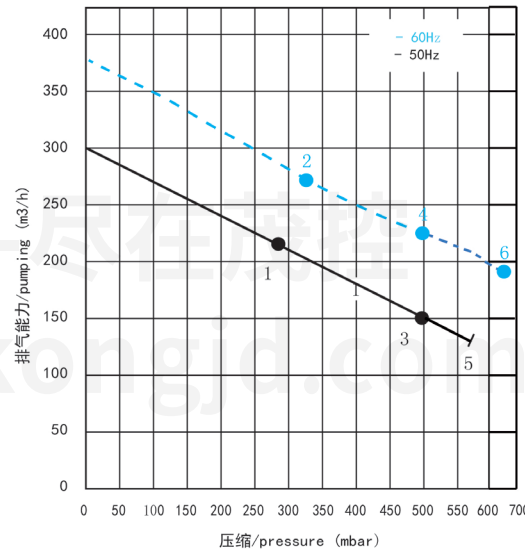

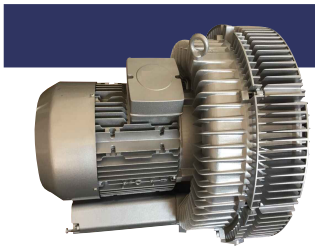

TB802PG075T
TB802PG110T

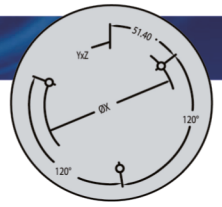

倒立安装尺寸
Connection detail

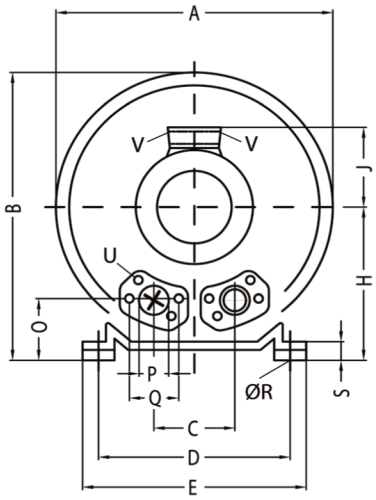

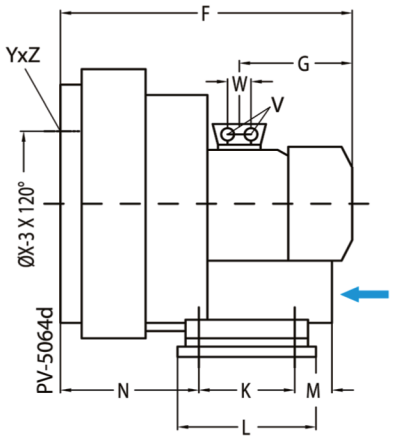

	相数 Phase	A	B	C	D	E	F	G	H	J	K	L	M	N	O	ΦP	ΦR	S	V	W	YxZ	X-holes	ØX
TB802PG075T	3	500	550	152	356	394	589	247	300	167	170	217	-	236	125	G2"½	15	66	4 x M32x1.5	42	M12x20	0°/120°/240°	Ø286
TB802PG110T	3	500	550	-	356	394	694	318	300	197	170	217	312	212	165	G2"½	15	66	4 x M40x1.5	54	M12x20	0°/120°/240°	Ø286

曲线编号 Curve n.	型号 Model n.	频率 Frequency Hz	功率 Output power kW	电压 Voltage V	额定电流 Rated current A	噪音比 Noise dB (A)	净重 Weight Kg	最大吸/吹 MaxVacuum /Compressure mbar	最大流量 Max Volume M3/h
1	TB802PG075 T	50	7.5	345-415△600-720Y	16.7△/9.6Y	74	91	-200/180	900
2	TB802PG075 T	60	8.6	345-415△600-720Y	17.3△/10.0Y	74	91	-150/120	1050
3	TB802PG110 T	50	11	345-415△600-720Y	28.0△/16.2Y	78	110	-280/310	900
4	TB802PG110 T	60	12.6	345-480△660-720Y	29.0△/16.7Y	78	110	-310/350	1050

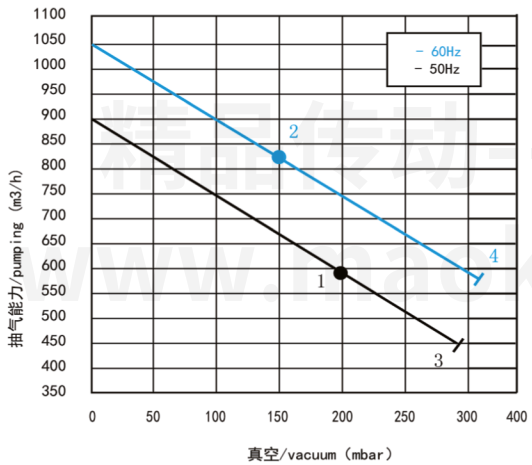

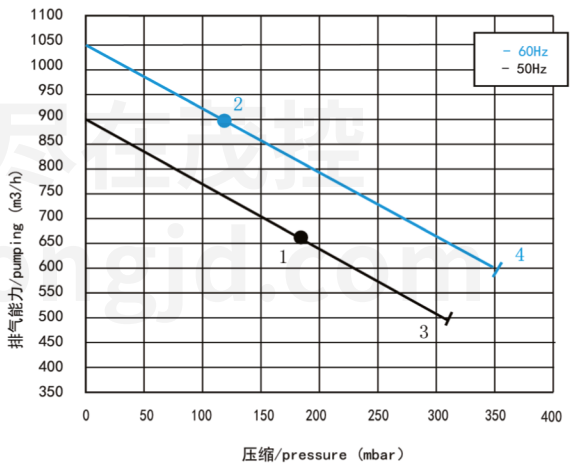

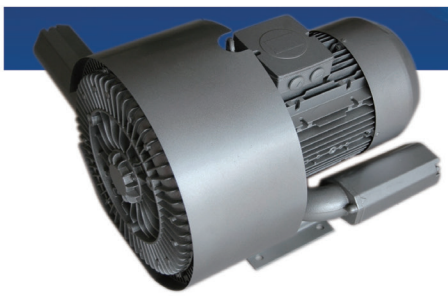

TB802SG055T
TB802SG075T
TB802SG110T
TB802SG150T

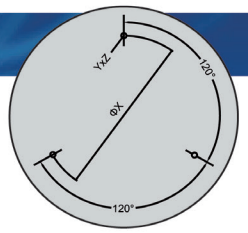

倒立安装尺寸
Connection detail

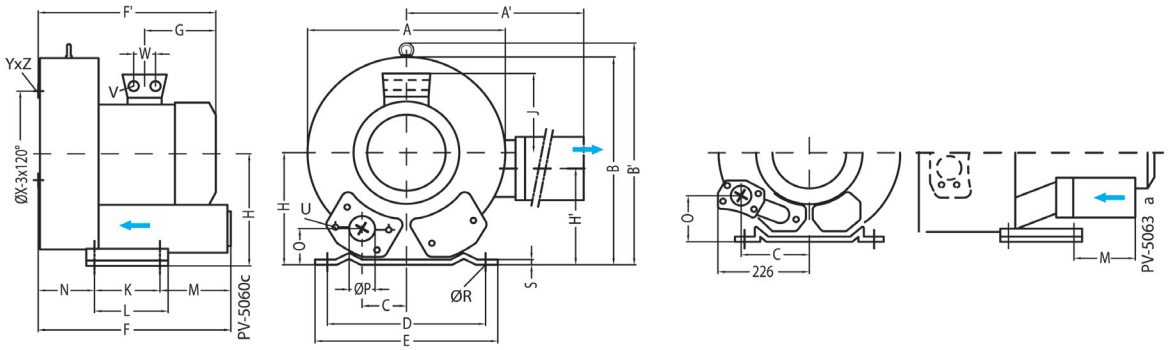

	相数 Phase	A	A'	B	B'	C	D	E	F	F'	G	H	H'	J	K	L	M	N	N'	O	ØP	ØR	S	V	W	YxZ	X-holes	ØX
TB802SG055T	3~	500	549	490	509	76	356	394	545	589	226	240	199	167	170	217	-	236	84	65	G2"½	15	6	4xM32x1.5	42	M12x2 0	51.4°/120°/240°	Ø286
TB802SG075T	3~	500	549	490	509	76	356	394	545	589	226	240	199	167	170	217	-	236	84	65	G2"½	15	6	4xM32x1.5	42	M12x2 0	51.4°/120°/240°	Ø286
TB802SG110T	3~	500	549	490	509	76	356	394	545	694	318	240	199	197	170	217	-	212	84	105	G2"½	15	6	4xM40x1.5	54	M12x2 0	51.4°/120°/240°	Ø286
TB802SG150T	3~	500	549	490	509	76	356	394	545	694	318	240	199	197	170	217	-	212	84	105	G2"½	15	6	4xM40x1.5	54	M12x2 0	51.4°/120°/240°	Ø286

曲线编号 Curve n.	型号 Model n.	频率 Frequency Hz	功率 Output power kW	电压 Voltage V	额定电流 Rated current A	噪音比 Noise dB (A)	净重 Weight Kg	最大吸/吹 MaxVacuum /Compressure mbar	最大流量 Max Volume M3/h
1	TB802SG055T	50	5.5	345-415 △600-720	13.3△/7.7Y	74	83	-250/240	522
2	TB802SG055T	60	6.3	380-480 △660-720	13.3△/7.7Y	78	83	-170/160	618
3	TB802SG075T	50	7.5	345-415 △600-720	16.7△/9.6Y	74	86	-400/400	522
4	TB802SG075T	60	8.6	380-480 △660-720	17.3△/10.0Y	78	86	-360/330	618
5	TB802SG110T	50	11.0	345-415 △600-720	28.0△/16.2Y	74	104	-430/600	522
6	TB802SG110T	60	12.6	380-480 △660-720	29.0△/16.7Y	78	104	-460/600	618
7	TB802SG150T	50	15.0	345-415 △600-720	32.5△/18.8Y	74	120	-460/670	522
8	TB802SG150T	60	17.3	380-480 △660-720	34.5△/19.9Y	78	120	-490/750	618

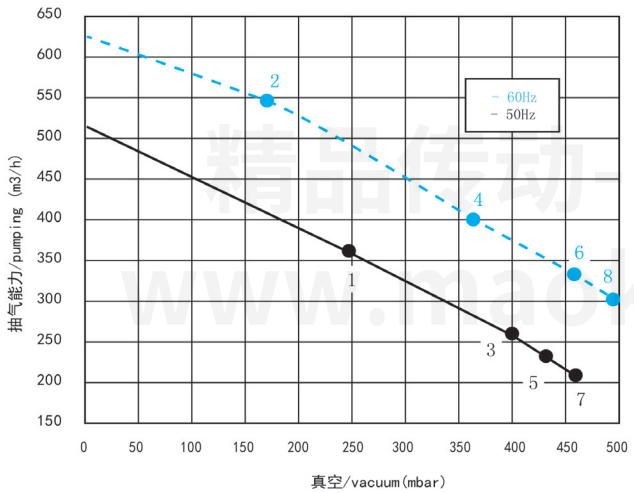

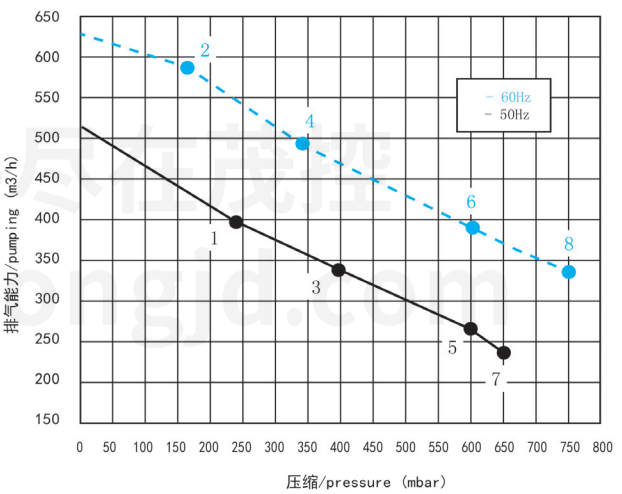

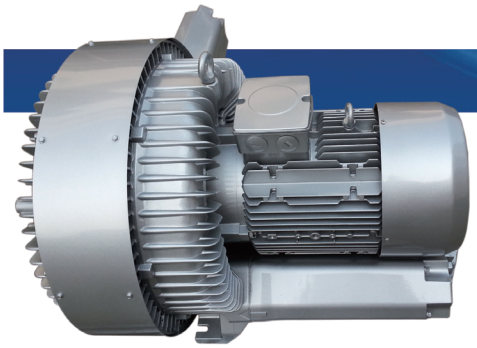

TB902SG125T
TB902SG165T
TB902SG200T
TB902SG250T

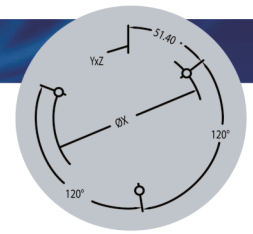

倒立安装尺寸
Connection detail

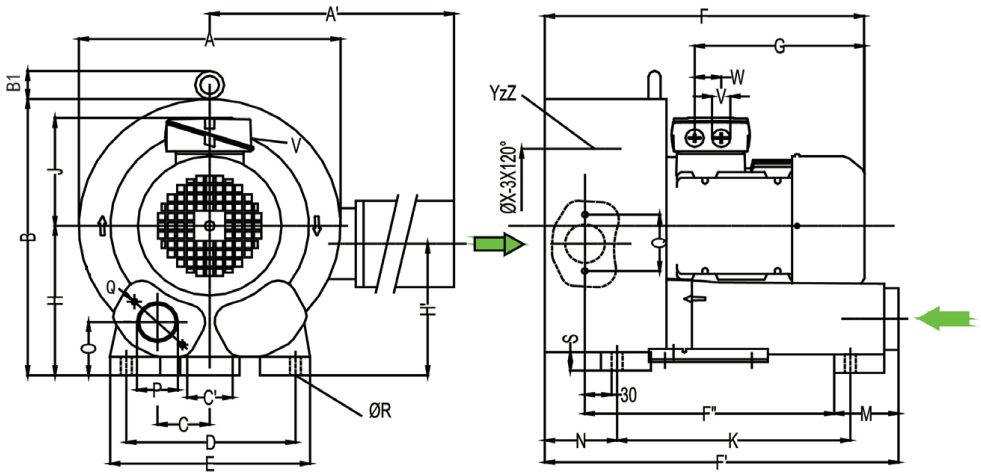

	相数 phase	A	A'	B	B1	C	D	E	F	F'	F"	G	H	H'	J	K	M	N	O	øP	Q	øR(C')	S	T	U	V	W	øX	Y*Z	X-holse
TB902SG125T	3	615	780	607	55	104	360	415	752	786	634	345	300	234	197	533	39	230	92	G4"	150	15	22	117	M12*30	4*M40*1.5	54	490	M12*30	51.4° /120° /240°
TB902SG165T	3	615	780	607	55	104	360	415	752	786	634	345	300	234	197	533	39	230	92	G4"	150	15	22	117	M12*30	4*M40*1.5	54	490	M12*30	51.4° /120° /240°
TB902SG200T	3	615	780	607	55	104	360	415	752	786	634	345	300	234	197	533	39	230	92	G4"	150	15	22	117	M12*30	4*M40*1.5	54	490	M12*30	51.4° /120° /240°
TB902SG250T	3	615	780	607	55	104	360	415	752	786	634	345	300	234	197	533	39	230	92	G4"	150	15	22	117	M12*30	4*M40*1.5	54	490	M12*30	51.4° /120° /240°

曲线编号 Curve n.	型号 Model n.	频率 Frequency Hz	功率 Output power kW	电压 Voltage V	额定电流 Rated current A	噪音比 Noise dB(A)	净重 Weight Kg	最大吸/吹 MaxVacuum /Compressure mbar	最大流量 Max Volume M3/h
1	TB902SG125T	50	12.5	345-415 △600-720Y	28.0 △/16.2Y	74	187	-300/270	1110
2	TB902SG125T	60	14.5	380-480 △660-720Y	29.0 △/16.7Y	78	187	-220/200	1300
3	TB902SG165T	50	16.5	345-415 △600-720Y	35.0 △/20.0Y	74	197	-410/370	1110
4	TB902SG165T	60	19.0	380-480 △660-720Y	36.5 △/21.0Y	78	197	-340/300	1300
5	TB902SG200T	50	20.0	345-415 △600-720Y	40.0 △/23.0Y	74	204	-440/500	1110
6	TB902SG200T	60	23.0	380-480 △660-720Y	42.0 △/24.2Y	78	204	-440/430	1300
7	TB902SG250T	50	25.0	345-415 △600-720Y	52.0 △/30.0Y	74	211	-440/590	1110
8	TB902SG250T	60	29.0	380-480 △660-720Y	52.0 △/30.0Y	78	211	-440/540	1300

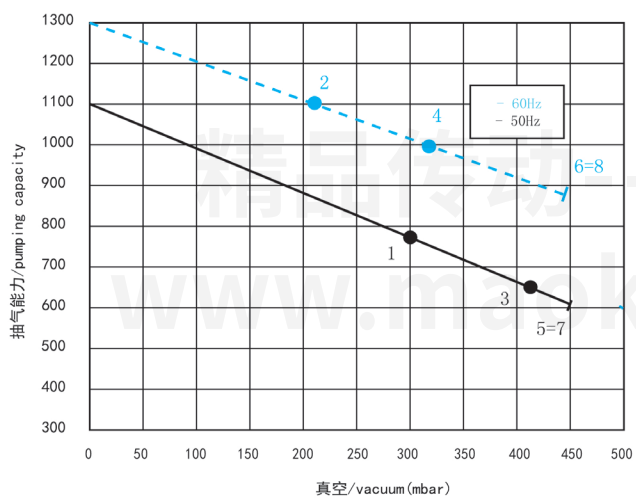

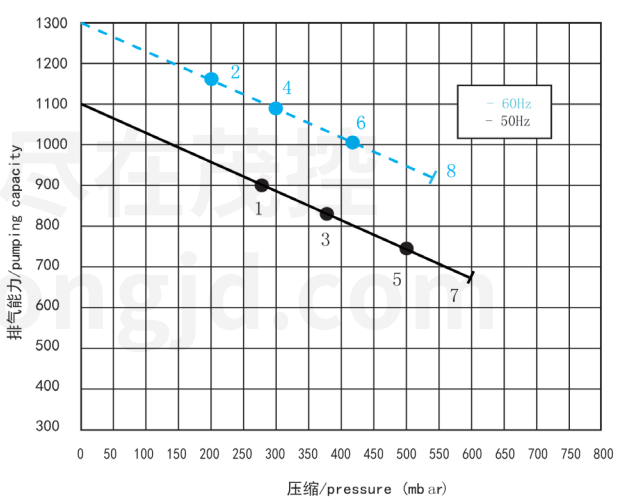

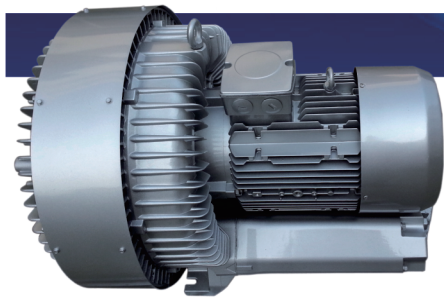

TB902PG150T
TB902PG200T
TB902PG250T

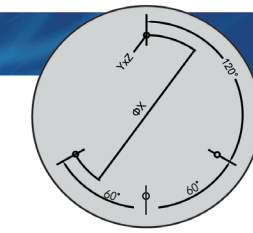

倒立安装尺寸
Connection detail

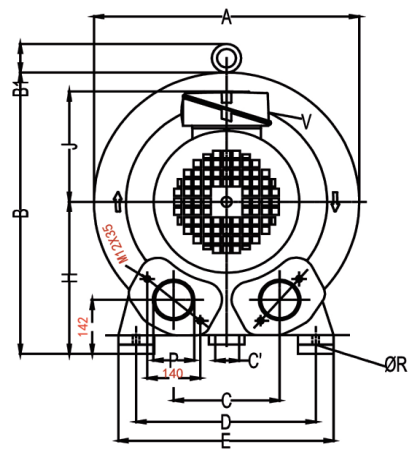

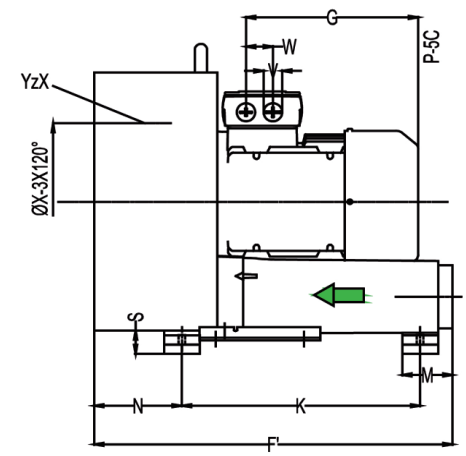

	相数 phase	A	B	B1	C	D	E	F	F'	G	H	J	K	M	N	O	øP	Q	øR(C')	S	U	V	W	øX	Y*Z	X-holse
TB902PG150T	3	615	663	55	207	360	415	752	786	345	358	197	533	39	230	92	G4"	150	15	22	M12*30	4*M40*1.5	54	490	M12*30	120° /60° /60°
TB902PG200T	3	615	663	55	207	360	415	752	786	345	358	197	533	39	230	92	G4"	150	15	22	M12*30	4*M40*1.5	54	490	M12*30	120° /60° /60°
TB902PG250T	3	615	663	55	207	360	415	752	786	345	358	197	533	39	230	92	G4"	150	15	22	M12*30	4*M40*1.5	54	490	M12*30	120° /60° /60°

曲线编号 Curve n.	型号 Model n.	频率 Frequency Hz	功率 Output power kW	电压 Voltage V	额定电流 Rated current A	噪音比 Noise dB(A)	净重 Weight Kg	最大吸/吹 MaxVacuum /Compressure mbar	最大流量 Max Volume M3/h
1	TB902PG150T	50	15	345-415 △600-720Y	35.0△/20.0Y	75	187	-130/110	1940
2	TB902PG150T	60	17.5	380-480 △660-720Y	36.5△/21.0Y	84	187	-60/40	2310
3	TB902PG200T	50	20	345-415 △600-720Y	40.0△/23.0Y	75	212	-220/200	1940
4	TB902PG200T	60	23	380-480 △660-720Y	42.0△/24.2Y	84	212	-160/130	2310
5	TB902PG250T	50	25	345-415 △600-720Y	52.0△/30.0Y	75	220	-310/270	1940
6	TB902PG250T	60	29	380-480 △660-720Y	52.0△/30.0Y	84	220	-270/220	2310

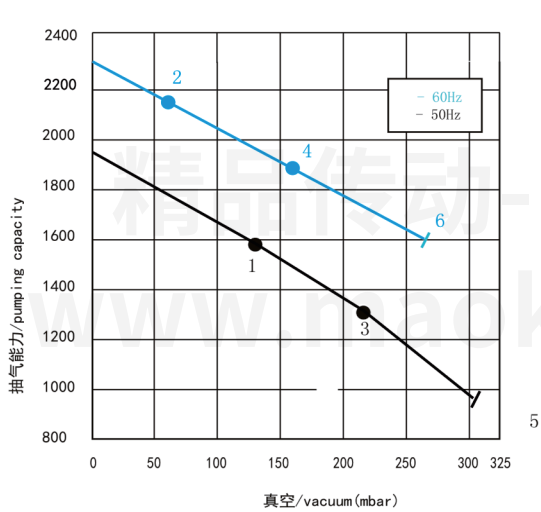

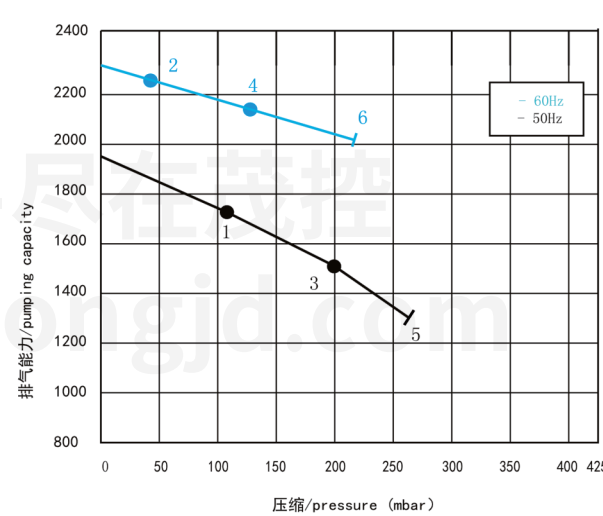

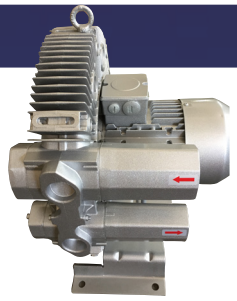

4TB201MG005M
4TB301MG009M
4TB401MG011M/011T
4TB501MG016T/022T
4TB601MG022T/033T

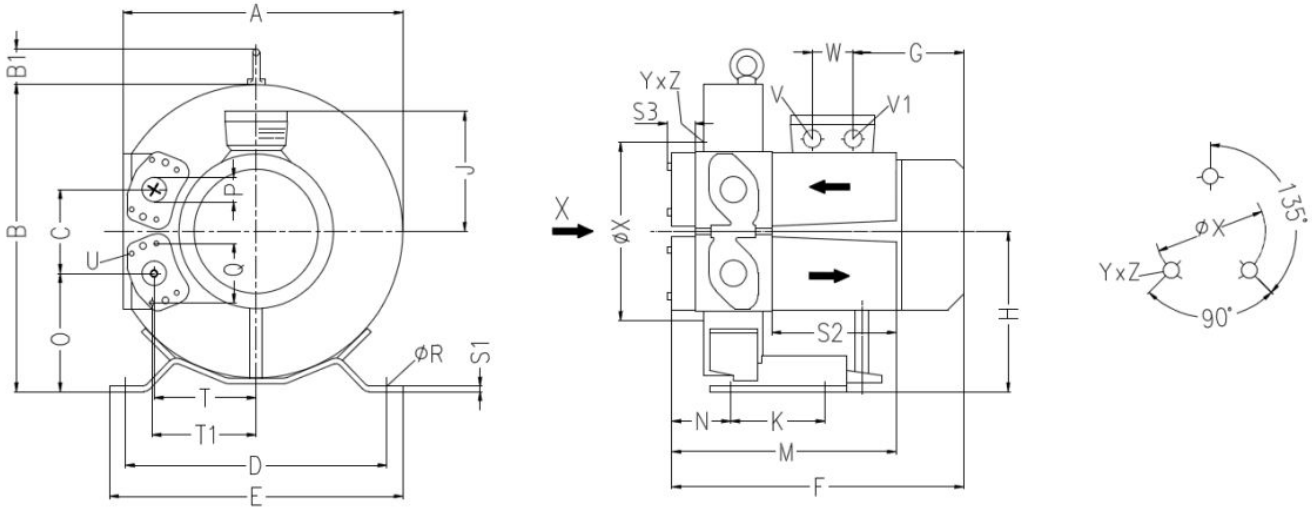

型号	A	B	B1	C	D	E	F	G	H	J	K	M	N
4TB201MG	294	319	39	87	260	298	293	129	167	111	105	252	65
4TB301MG	313	339	39	94	290	325	295	153	177	120	105	256	67
4TB401MG	346	375	39	103	315	350	321	129	195	111	130	260	66
4TB501MG	368	395	39	114	328	363	361	185	205	128	152	265	68
4TB601MG	418	455	39	127	371	406	364/390	129/211	235	111	105	271	72

O	P	Q	∮R	S1	S2	S3	T	T1	U	V	V1	W	∮X	YxZ
124	G1 1/4	64	14	4	140	31	105	107	M6*17	M25*1.5	M16*1.5	32	153	M6*15
130	G1 1/4	64	14	4	140	31	114	116	M6*17	M25*1.5	M16*1.5	32	153	M6*15
143	G1 1/4	64	14	4	140	31	125	127	M6*17	M25*1.5	M16*1.5	32	167	M6*15
148	G1 1/4	64	14	5	140	31	137	138	M6*17	M25*1.5	M16*1.5	32	192	M6*15
172	G1 1/4	64	14	4	140	31	153	155	M6*17	M25*1.5	M16*1.5	32	228	M6*15

曲线编号	型号	频率（HZ）	功率(KW)	电压(V)	额定电流(A)	噪音比dB(A)	净重(Kg)	最大吸/吹(mbar)	最大流量(m³/h)
1	4TB201MG005M	50	0.55	200-240V	3.1	57	18	-230/290	47
1H		60	0.63	200-240V	7.1	62	18	-270/320	57
2	4TB202SG015M	50	1.5	200-240V	9.7	58	30	-370/600	47
2H		60	1.75	200-240V	10.3	62	30	-420/660	60
5	4TB301MG009M	50	0.94	200-240V	7.6	57	18	-250/350	66
5H		60	1.1	200-240V	9	62	18	-280/390	80
6	4TB302SG015M	50	1.5	200-240V	9.7	59	32	-400/550	65
6H		60	1.75	200-240V	10.3	53	32	-390/540	76
8	4TB401MG011M	50	1.1	200-240V	10.1	55	23	-300/380	87
8H		60	1.3	200-240V	10.3	62	23	-350/390	105
1	4TB201MG005T	50	0.55	200-240△/345-415Y	2.8△/1.6Y	57	16	-230/290	47
1H		60	0.63	220-275△/380-480Y	3△/1.7Y	62	16	-270/320	57
3	4TB301MG005T	50	0.55	200-240△/345-415Y	2.8△/1.6Y	57	16	-250/250	66
3H		60	0.63	220-275△/380-480Y	3△/1.7Y	62	16	-260/250	80
4	4TB301MG008T	50	0.81	200-240△/345-415Y	4△/2.3Y	57	17	-280/350	66
4H		60	0.94	220-275△/380-480Y	4△/2.3Y	62	17	-340/360	80
7	4TB401MG011T	50	1.1	200-240△/345-415Y	5.4△/3.1Y	58	23	-300/380	87
7H		60	1.3	220-275△/380-480Y	5.4△/3.1Y	62	23	-340/370	105
9	4TB501MG016T	50	1.6	200-240△/345-415Y	7.5△/4.3Y	64	26	-310/360	120
9H		60	2.05	220-275△/380-480Y	7.6△/4.4Y	68	26	-340/320	145
10	4TB501MG022T	50	2.2	200-240△/345-415Y	11.4△/6.6Y	64	29	-310/470	120
10H		60	2.55	220-275△/380-480Y	11.2△/6.5Y	68	29	-360/480	145
11	4TB601MG022T	50	2.2	200-240△/345-415Y	11.4△/6.6Y	65	32	-340/360	165
11H		60	2.55	220-275△/380-480Y	11.2△/6.5Y	71	32	-360/315	195
12	4TB601MG033T	50	3.3	200-240△/345-415Y	13△/7.5Y	65	35	-340/480	165
12H		60	3.8	220-275△/380-480Y	14.2△/8.2Y	71	35	-380/530	195

50HZ

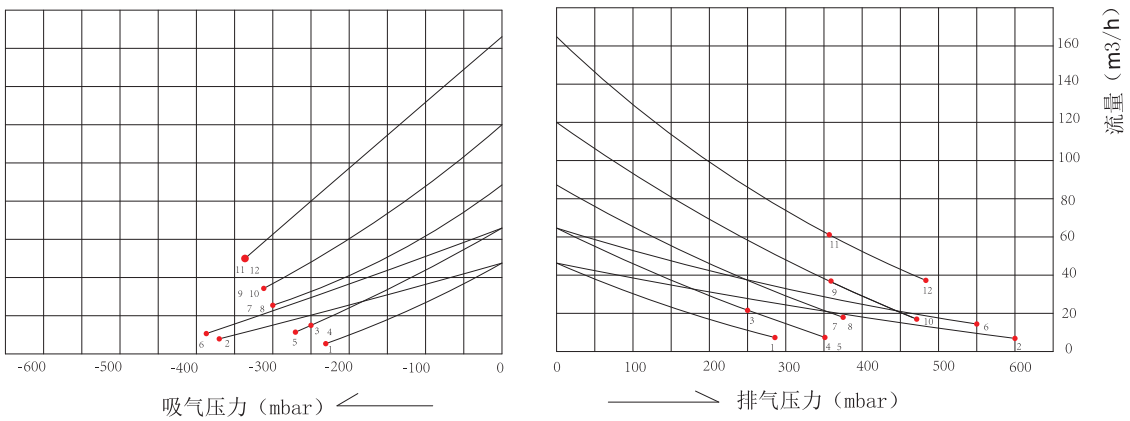

60HZ

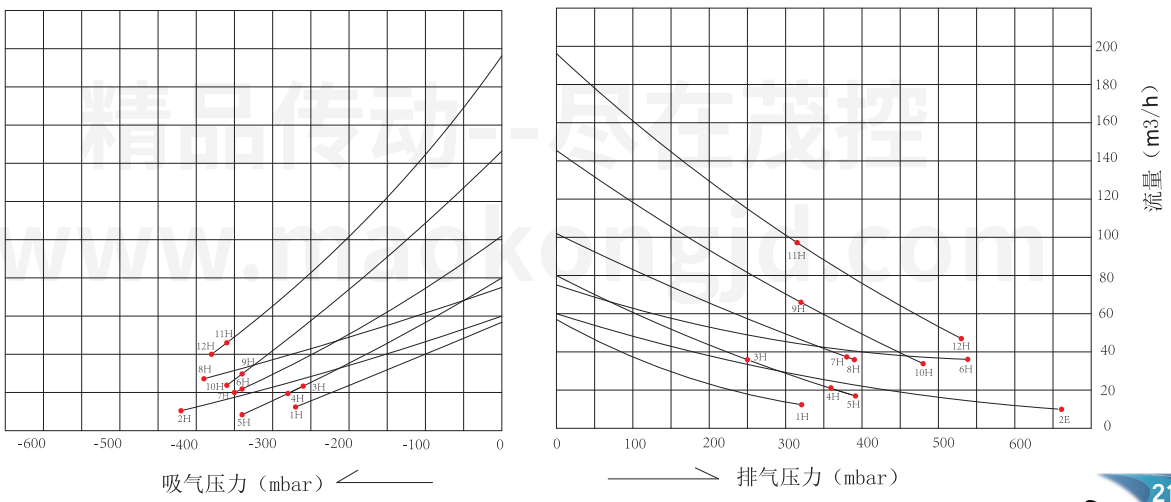

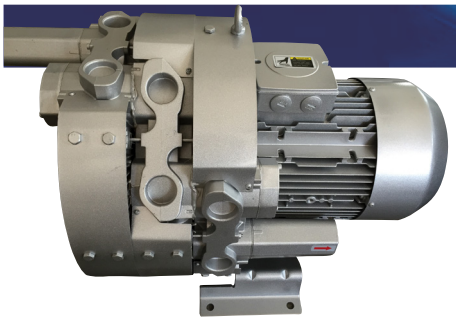

4TB202SG015M/008T/016T
4TB302SG015M/011T/016T
4TB402SG016T/033T
4TB502SG022T/043T
4TB602SG033T/055T
4TB603SG075T

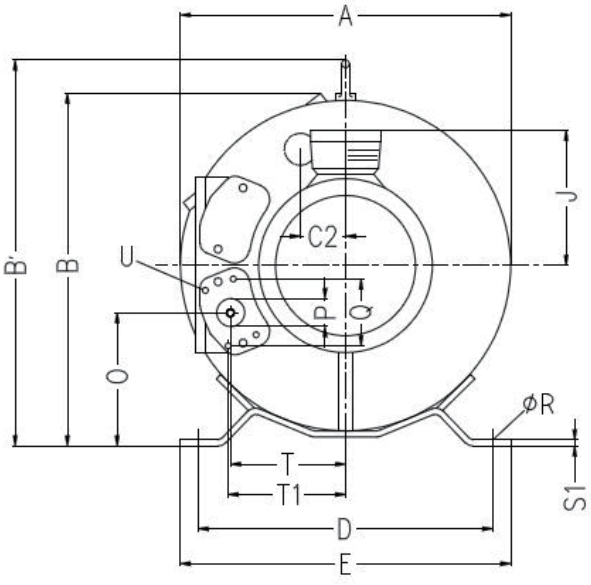

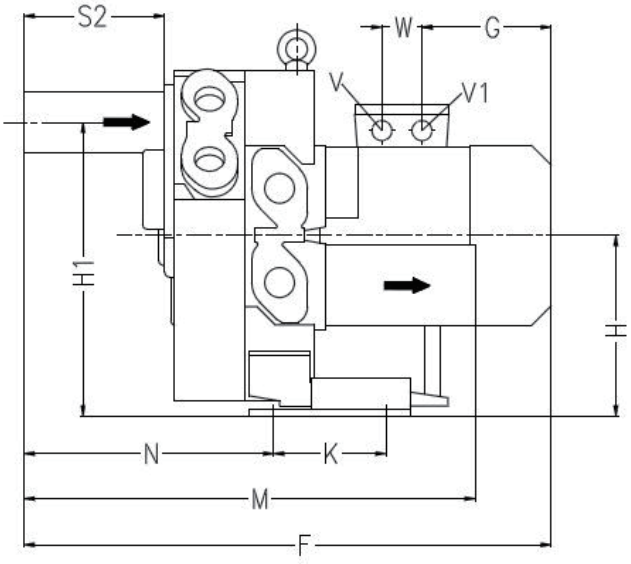

型号	A	B	B'	C2	D	E	F	G	H	H1	J	K	M
4TB202SG	313	326	359	43	260	298	469/525	130/185	167	272	111	105	426
4TB302SG	331	345	380	47	290	325	390/421	153/185	177	291	120	105	431
4TB402SG	363	377	414	52	315	350	529/554	180/211	195	319	128	130	436
4TB502SG	387	402	435	57	328	363	549/603	185/211	206	343	128	152	453
4TB602SG	442	457	495	63	372	406	578/643	211/248		389	128	152	458
4TB603SG	442	402	492	63	371	406	717	274	236	389		152	539

N	O	P	Q	∮R	S1	S2	S3	T	T1	U	V	V1	W	W2
241	123	G1 1/4	64	14	4	140	31	105	107	M6*17	M25*1.5	M16*1.5	32	
243	130	G1 1/4	64	14	4	140	31	114	116	M6*17	M25*1.7	M16*1.5	32	
243	143	G1 1/4	64	14	4	140	31	125	127	M6*17	M25*1.9	M16*1.5	32	
256	148	G1 1/4	64	14	5	140	31	137	138	M6*17	M25*1.11	M16*1.5	42	
259	173	G1 1/4	64	14	5	140	31	153	155	M6*17	M25*1.13	M16*1.5	42	
336	172	G1 1/4	64	14	5	146		153		M6*17	M32*1.5		42	120

曲线编号	型号	频率（HZ）	功率(KW)	电压(V)	额定电流(A)	噪音比dB(A)	净重(Kg)	最大吸/吹(mbar)	最大流量(m³/h)
1	4TB202SG008T	50	0.81	200-240△/345-415Y	4△/2.3Y	58	24	-370/490	47
1E		60	0.94	220-275△/380-480Y	4△/2.3Y	62	24	-440/480	60
2	4TB202SG016T	50	1.6	200-240△/345-415Y	7.5△/4.3Y	58	28	-370/650	47
2E		60	2.05	220-275△/380-480Y	7.6△/4.4Y	62	28	-500/740	60
3	4TB302SG011T	50	1.1	200-240△/345-415Y	5.4△/3.1Y	59	29	-400/480	65
3E		60	1.3	220-275△/380-480Y	5.4△/3.1Y	63	29	-480/480	76
4	4TB302SG016T	50	1.6	200-240△/345-415Y	7.5△/4.3Y	59	30	-440/540	65
4E		60	2.05	220-275△/380-480Y	7.5△/4.4Y	63	30	-560/600	76
5	4TB402SG016T	50	1.6	200-240△/345-415Y	7.5△/4.3Y	61	33	-480/450	87
5E		60	2.05	220-275△/380-480Y	7.6△/4.4Y	66	33	-430/410	105
6	4TB402SG033T	50	3.3	200-240△/345-415Y	13△/7.5Y	61	39	-500/750	87
6E		60	3.8	220-275△/380-480Y	13.8△/8Y	66	39	-510/850	105
7	4TB502SG022T	50	2.2	200-240△/345-415Y	11.4△/6.6Y	64	40	-470/460	120
7E		60	2.55	220-275△/380-480Y	11.2△/6.5Y	70	40	-500/450	145
8	4TB502SG043T	50	4.3	345-415△	9.5△	65	51	-500/820	120
8E		60	4.8	380-480△	10△	71	51	-530/810	145
9	4TB602SG033T	50	3.3	200-240△/345-415Y	13△/7.5Y	67	48	-460/500	165
9E		60	3.8	220-275△/380-480Y	14.2△/8.2Y	71	48	-480/420	195
10	4TB602SG055T	50	5.5	345-415△	12△	68	65	-460/740	165
10E		60	6.3	380-480△	11.5△	72	65	-480/840	195
11	4TB603SG075T	50	7.5	345-415△	16△	72	86	-730/1040	170
11E		60	8.6	380-480△	16△	76	86	-700/1040	200

50HZ

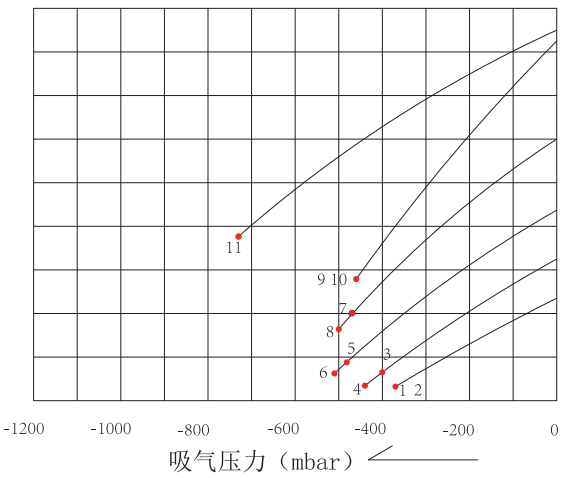

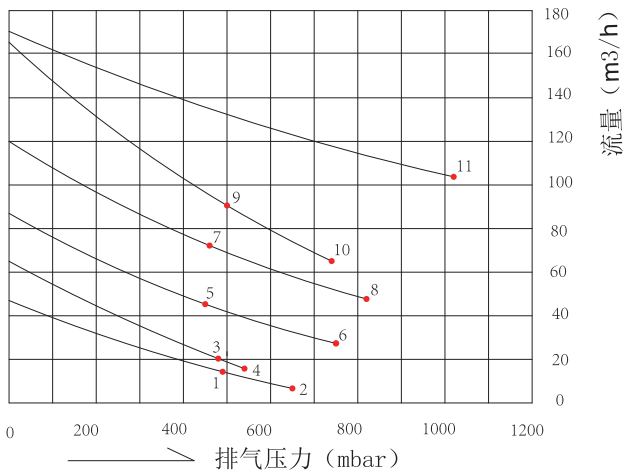

60HZ

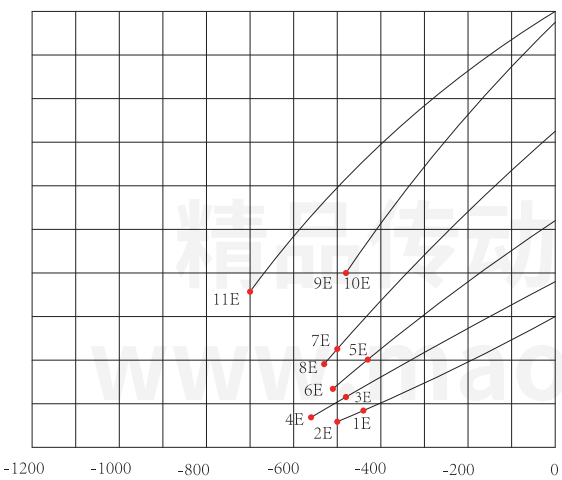

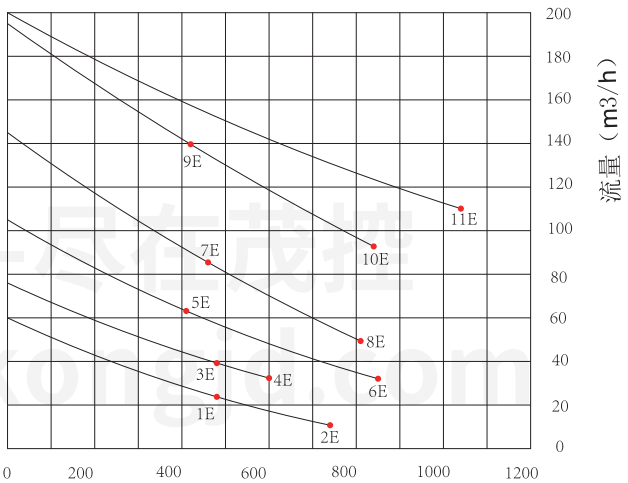

高效能德式真空泵
German type vacuum pump

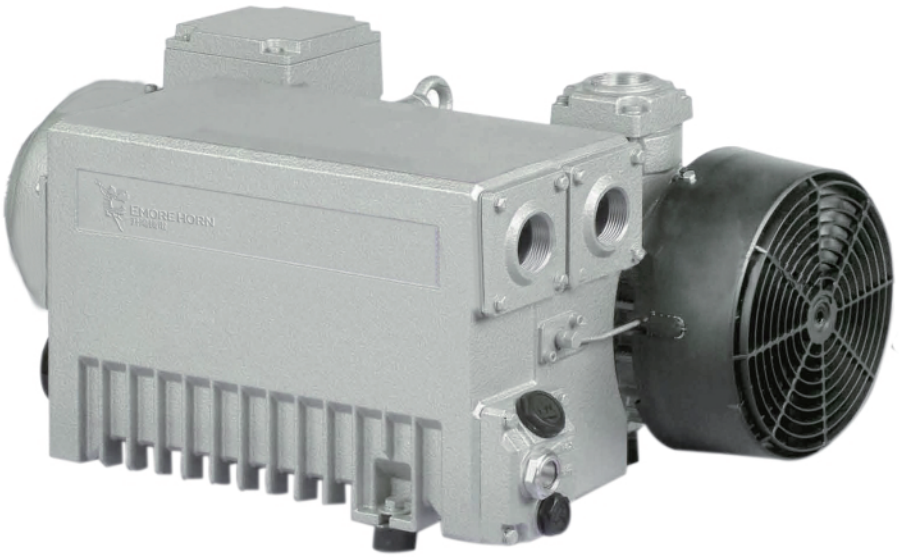

ERV
0025-0100 H

高效能
ERV機型真空度高，在操作壓力為1 mbar 時具有較大的排氣量，因此能效高，更適合應用在工業界，並可長時間連續使用。

高信賴
可靠性佳的旋片式設計，且用標準型馬達直軸帶動，故效率高。並裝有內置式止回閥，可避免停機時，真空泵逆轉，而損壞泵體。

保養易
機型設計簡單，零件更換容易。除定期的保養之外，無需額外的維修工作。

高環保
裝備可靠性高的潤滑油冷卻循環系統，其裝有油霧過濾器可回收油氣，從而使潤滑油可持續循環使用。另外，還具有低噪音低震動的優點。

High Efficiency
Low ultimate pressure and high suctions capacities at I hPa (mbar) operating pressure are the outstanding new features of the completely revised ERV series. So the proven ERvvacuum pumps can now be use in many more industrial applications and more efficiently when operating continuously.

Reliable
by means of rugged design, the proven rotating vane principle and high quality build standards. Driven by standard motors directly connected to the pump. Suction flange with integrated non–return valve in order to prevent venting of the vacuum system when the pump is shut down.

Easy to service
by means of clearly arranged design with easily accessible service unit. No maintenance requirements other than regular service intervals.

Environmentally friendly
by means of air cooling and internal oil recirculation. Oil separator for clean exhaust air as standard. Low noise and vibration level.

50HZ

高效能德式真空泵50Hz/German type vacuum pump 50Hz

編號 Item	型號 Model 60HZ	額定輸出 Rated output (Kw)	馬達轉速 Motor speed (RPM)	操作溫度 Operation temperature (℃)	最大真空度 Vacuum degree	最大流量 Max volume (M^3/h)	燥音比 Noise (Db)	重量 Weight (kg)	油量 Oil filling (L)
H1	ERV—25	0.75	1500	80	0.5	25	60	34	1
H2	ERV—40	1.1	1500	82	0.5	40	63	38	1
H3	ERV—60	1.5	1500	84	0.5	63	64	52	2
H4	ERV—100	2.2	1500	84	0.5	100	65	70	2

60HZ

高效能德式真空泵60Hz/German type vacuum pump 60Hz

編號 Item	型號 Model 60HZ	額定輸出 Rated output (Kw)	馬達轉速 Motor speed (RPM)	操作溫度 Operation temperature (℃)	最大真空度 Vacuum degree	最大流量 Max volume (M^3/h)	燥音比 Noise (Db)	重量 Weight (kg)	油量 Oil filling (L)
H11	ERV—25	1.1	1800	85	0.5	30	63	34	1
H12	ERV—40	1.5	1800	90	0.5	48	66	38	1
H13	ERV—60	2.2	1800	92	0.5	76	66	52	2
H14	EBV—100	3.0	1800	93	0.5	120	68	70	2

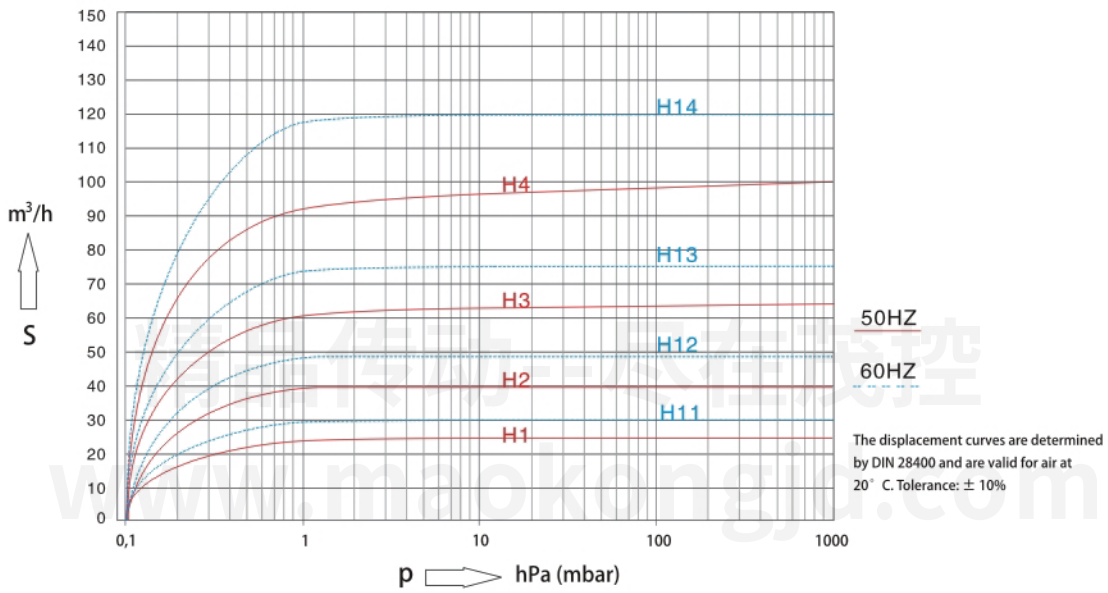

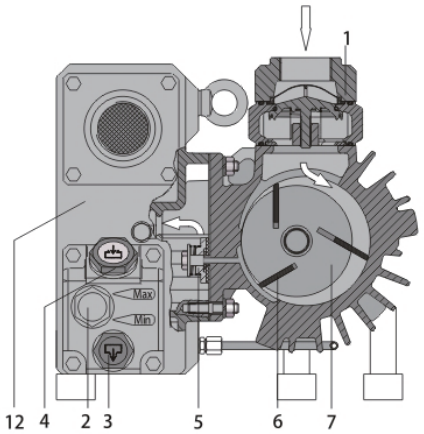

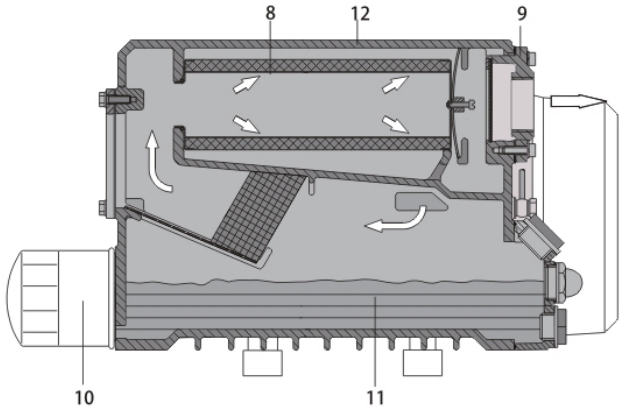

1 Inlet flange
2 Oil sight glass
3 Oil drain plug
4 Oil fill plug
5 Exhaust valve
6 Vane
7 Rotor
8 Exhaust filter
9 Exhaust cover plate
10 Oil filter
11 Oil sump
12 Oil separator

Principle of operation

These pumps work according to the rotary vane principle. An eccentrically installed rotor (7) rotates in the cylinder. The centrifugal force of the rotation pushes the vanes (6), which glide in slots in the rotor, towards the cylinder wall. The vanes separate the sickle-shaped space between rotor and cylinder into chambers. When the chambers are connected with the inlet channel, gas is sucked in, compressed by the next rotation and pushed into the oil separator. Differential pressure constantly causes oil to be passed into the compression chambers. The oil and medium are then discharged into the oil separator (12) and there separated from the exhaust air by gravity and the exhaust filter (8). 011 collects on the bottom of the oil separator and is passed into the compression chamber again (oil recirculation).

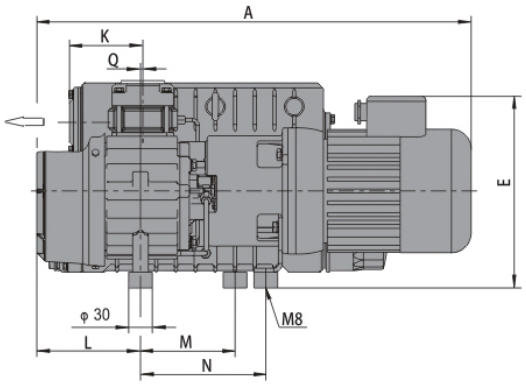

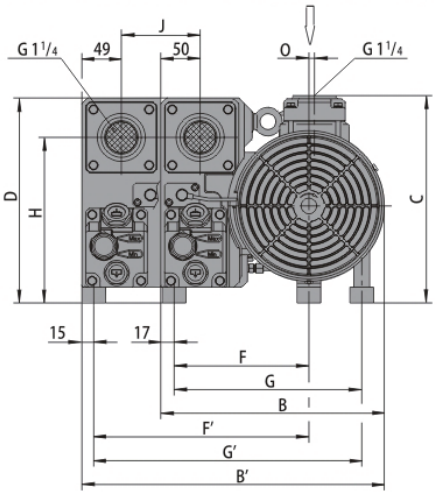

尺寸 Dimensions	A	B	B'	C	D	E	F	F'	G	G'	H	J	K	L	M	N	O	Q
ERV—25																		
50 Hz	551	284	–	263	260	243	171	–	238	–	210	–	90	131	120	159	7	0
50/60 Hz	599	284		263	260	251	171	–	238	–	210	–	90	131	120	159	7	0
ERV—40																		
50 Hz	613	284	–	263	260	258	171	–	238	–	210	–	87	151	123	179	7	0
50/60 Hz	639	284	–	263	260	251	171	–	238	–	210	–	87	151	123	179	7	0
ERV—60																		
50 Hz	607	–	406	290	280	269	–	277	–	277	231	93	96	137	0	199	0	3
50/60 Hz	640	–	406	290	280	294	–	277	–	277	231	93	96	137	0	199	0	3
ERV—100																		
50 Hz	694	–	406	290	280	282	–	277	–	277	231	93	93	170	0	226	0	0
50/60 Hz	699	–	406	290	280	294	–	277	–	277	231	93	93	170	0	226	0	0

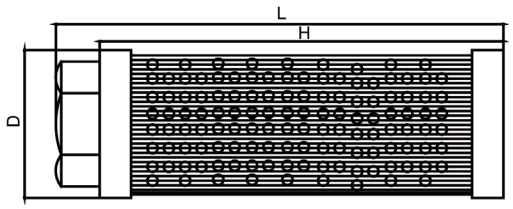

MF 型过滤器 MFType SuctionFilter								
符号 Symbol / 项目 Letm	PT	D(mm)	L(mm)	H(mm)	B	过滤精度 Filtratiom mesh (目)	流量 L/min)	重量 (weight) (kg)
MF-08	1”	58	170	155	42	100	110	0.20
MF-10	1 1/4”	71	186	170	54	100	210	0.35
MF-12	1 1/2”	85	196	182	65	100	285	0.49
MF-16	2”	103	215	202	75	100	395	0.65
MF-20	2 1/2”	148	274	252	97	100	750	1.20
MF-32	4”	208	380	375	142	100	1000	2.45

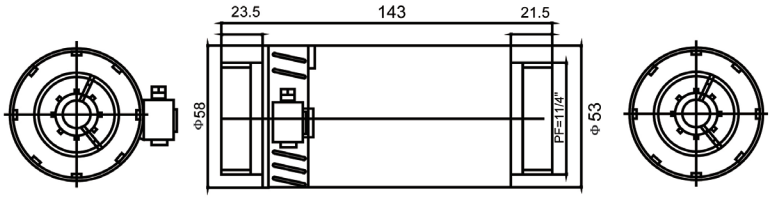

释压阀 Pressure Relief Valve			
形式 Type	口径 (PT)	L (mm)	压力调整范围 Pressure Range
RV-01	1 1/4 “	143	0-3000mmAq
RV-02	1 1/4 ”	143	0-6000mmAq

外用消音器 Outside Silencer		
形式 Type	口径 (PT)	适用机种 (Available Models)
SI-2	2	TB501... TB701... TB502... TB702...
SI-2.5	2.5	TB801... TB802...
SI-4	4	TB901... TB902...

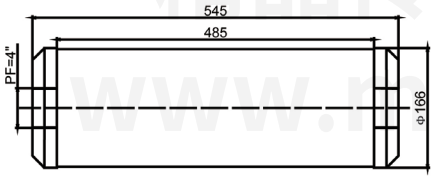

SI-4 内牙型

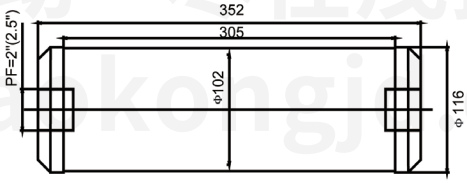

SI-2(2.5) 内牙型

FAT 压送用入口过滤扩散器

筒式过滤器（高压侧）

过滤器连接口径从1寸到6寸，最大过滤流量高达4000m3/h，内部装有可拆卸的完整滤芯（滤芯型式可为纸张，聚酯纤维，不锈钢丝网，活性炭等等）使产品有高水平的灰尘收集能力，每个过滤器100%检测达到安全高效的目的。

Cartridge filters (Pressure side)

Filters from 1" to 6" and, upon request, we design filters with flows up to 4.000 mc/h. The catridges fitted inside the complete filters can give different types of filtration (paper, polyester, inox steel, separator and active carbon) lending pur products high level of dust collection. Each filter is tested at 100% safety standards before and after painting.

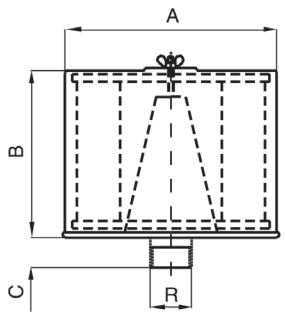

型号 Code	过滤能力 Capacity (m3/h)	A	B	滤芯管长度 spool pipe length	接口尺寸 Spool pipe	滤芯型号 Cartridge
FAT6030	85	153	105	130	1"G	CAFT2454
FAT6040	160	153	105	200	1"1/4G	CAFT2454
FAT6050	250	195	155	200	1"1/2G	CAFT2455
FAT6060	400	230	155	200	2"G	CAFT2456
FAT7080	630	261	175	200	2"1/2G	CAFT2457
FAT6070	700	292	180	200	3"G	CAFT2457
FAT6080	1400	410	330	200	4"G	CAFT2458

FLV 真空用过滤器

串联式真空过滤器

过滤器连接口径从3/8寸到6寸，最大过滤流量高达4000m3/h，内部装有可拆卸的完整滤芯（滤芯型式可为纸张，聚酯纤维，不锈钢丝网，活性炭等等）使产品有高水平的灰尘收集能力，每个过滤器100%检测达到安全高效的目的。

In-line vacuum filters

Filters from 3/8" to 6" and, upon request, we design filters with flows up to 4.000 mc/h. The catridges fitted inside the complete filters can give different types of filtration (paper, polyester, inox steel, separator and active carbon) lending pur products high level of dust collection. Each *filter is tested at 100% safety standards before and after painting.*

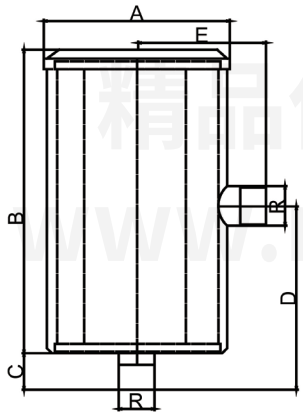

型号 Code	过滤能力 Capacity (m3/h)	R	A	B	C	D	E	滤芯型号 Cartridge
FLV001	24	3/8" G	80	66	12	39	45	CLV2093
FLV002/1	42	1/2" G	110	76	14	53	54	CLV2034
FLV004/1	85	1" G	133	85	17	53	78	CLV2032
FLV003	108	1" 1/4 G	170	141	17	93	96	CLV2051
FLV005	192	1" 1/2 G	170	170	18	124	100	CLV2070
FLV006	310	2" G	200	240	18	124	114	CLV2050
FLV007	550	3" G	270	180	50	145	165	CLV2063
FLV008	720	4" G	270	180	50	145	165	CLV2063
FLV009	1080	3" G	280	395	50	330	190	CLV2211
FLV010	1260	4" G	360	590	50	400	230	CLV2086

侧通式鼓风机配管图

The side formula blower piping diagram

真空用例　V acuum pump

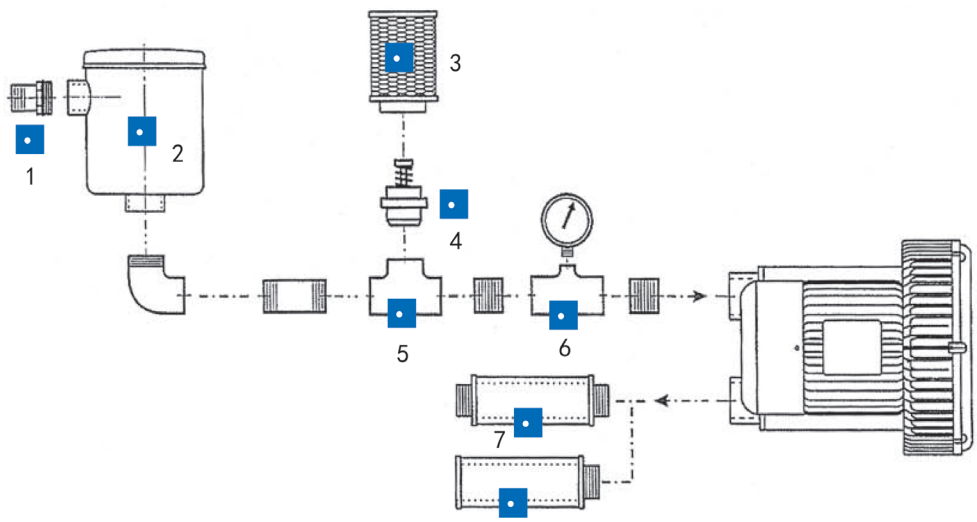

压送用例 Pressure side

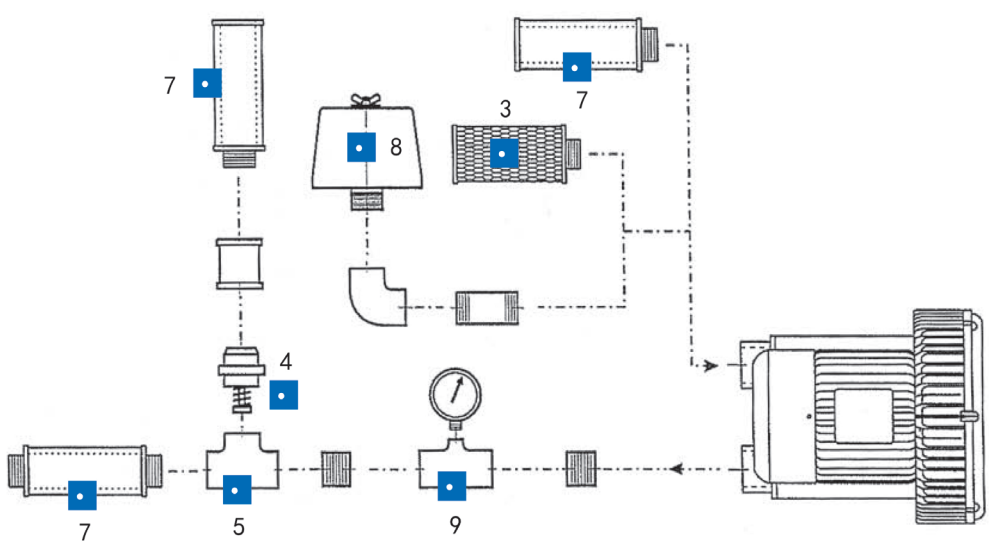

1 外丝接头	1 Outside the wire connector
2 真空过滤器	2 Vacuum filter
3 空气过滤器	3 The air filter
4 安全阀（泄压阀）	4 Safety valve (pressure relief valve)
5 三通管	5 T-piece
6 真空表	6 The vacuum table
7 消音器	7 Silencer
8 入口扩散器	8 Inlet diffuser
9 压力表	9 Pressure gauge

上海茂控机电设备有限公司
地址：闵行区春申路 2328 弄 2 号 3 幢
电话：021-34538996 34538997 34538998
传真：021-34632989
风机专网：www.maokongjd.com
综合网址：www.sh-mk.com
E-mail：shmk@sh-mk.com

青岛沃马德精密传动设备有限公司
地址：城阳区盛奥机电市场 C 区-91 号
电话：0532-89085180
传真：0532-89087275

华中地区办事处
长沙市雨花机电市场 D 区二幢 109 号
电话： 0731-86171560
手机： （0）13512117817

Three Leaf Blower

AIR Transmission TECHNOLOGIES