SHENZHEN MENGKE ELECTRONICS TECHNOLOGY CO.,LTD

SOT-23 Plastic-Encapsulate MOSFETS

MK2314 N-Channel 20-V(D-S) MOSFET

V(BR)DSS	RDS(on)MAX	ID
20 V	30mΩ@4.5V	5A
	36mΩ@2.5V	
	46mΩ@1.8V	

FEATURE

※ TrenchFET Power MOSFET

APPLICATION

※ Load Switch for Portable Devices

※ DC/DC Converter

MARKING

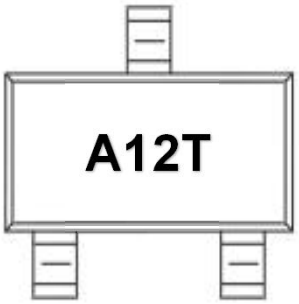

Equivalent Circuit

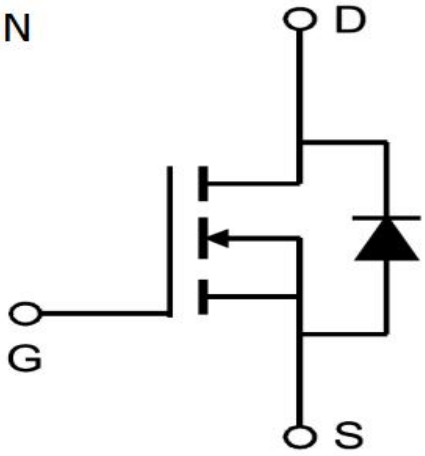

SOT-23

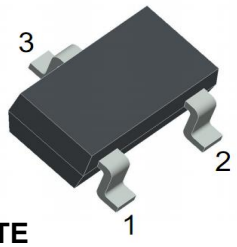

1.GATE
2.SOURCE
3.DRAIN

Maximum ratings (Ta=25℃ unless otherwise noted)

Parameter	Symbol	Value	Unit
Drain-Source Voltage	**VDS**	20	V
Gate-Source Voltage	**VGS**	±8	
Continuous Drain Current	**ID**	5	A
Pulsed Drain Current	**IDM**	20	
Continuous Source-Drain Current(Diode Conduction)	**IS**	1.1	
Power Dissipation	**PD**	1	W
Thermal Resistance from Junction to Ambient (t≤5s)	**RθJA**	100	℃/W
Operating Junction	**TJ**	150	℃
Storage Temperature	**TSTG**	-55~+150	℃

MOSFET ELECTRICAL CHARACTERISTICS

Static Electrical Characteristics (Ta = 25 ℃ Unless Otherwise Noted)

Parameter	Symbol	Test Condition	Min	Typ	Max	Unit
Static						
Drain-source breakdown voltage	**V(BR)DSS**	VGS = 0V, ID = 250μA	20			V
Gate-source threshold voltage	**VGS(th)**	VDS =VGS, ID = 250μA	0.4		1	V
Gate-source leakage	**IGSS**	VDS =0V, VGS = ±8V			±100	nA
Zero gate voltage drain current	**IDSS**	VDS = 20V, VGS =0V			1	μA
Drain-source on-state resistancea	**RDS(on)**	VGS = 4.5V, ID = 5A		18	30	mΩ
		VGS = 2.5V, ID = 4.5A		23	36	mΩ
		VGS = 1.8V, ID = 4A		28	46	mΩ
Forward transconductancea	**gfs**	VDS = 4.5V, ID = 5A		6		S
Diode forward voltage	**VSD**	IS=1A,VGS=0V		0.7	1.5	V
Dynamic						
Input capacitance	**Ciss**	VDS = 10V,VGS =0V, f=1MHz		865		pF
Output capacitance	**Coss**			105		pF
Reverse transfer capacitanceb	**Crss**			55		pF
Total gate charge	**Qg**	VDS = 10V,VGS = 4.5V, ID = 5A		6	4.5	nC
Gate-source charge	**Qgs**			1		nC
Gate-drain charge	**Qgd**			1.3		nC
Gate resistance	**Rg**	f=1MHz		3		Ω
Switchingb						
Turn-on delay time	**td(on)**	VDD= 10V RL=10Ω, ID ≈ 1A, VGEN= 4.5V,Rg=6Ω		7	15	ns
Rise time	**tr**			15	20	ns
Turn-off delay time	**td(off)**			15	32	ns
Fall time	**tf**			10	20	ns
Drain-source body diode characteristics						
Continuous Source-Drain Diode Current	**IS**	Tc=25℃			1.2	A
Pulsed Diode forward Curren	**ISM**				20	A

Note :

1. Repetitive Rating : Pulse width limited by maximum junction temperature.
2. Surface Mounted on FR4 Board, t < 5 sec.
3. Pulse Test : Pulse Width≤300μs, Duty Cycle ≤ 2%.
4. Guaranteed by design, not subject to production testing.

SOT-23 PACKAGE OUTLINE DIMENSIONS

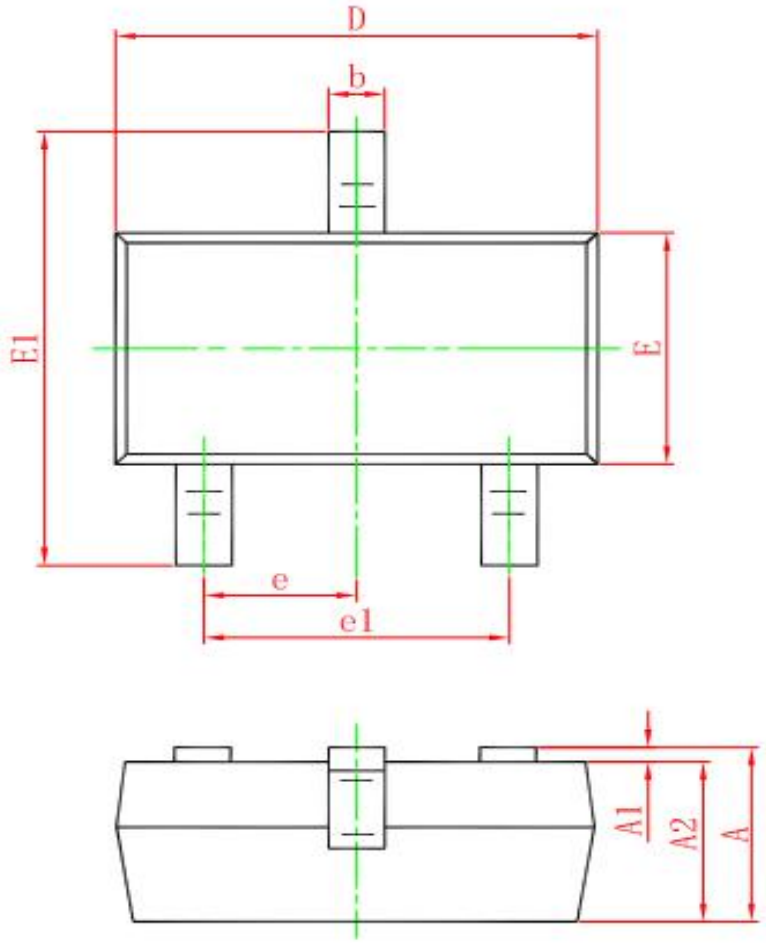

Symbol	Dimensions In Millimeters		Dimensions In Inches	
	Min.	Max.	Min.	Max.
A	0.900	1.150	0.035	0.045
A1	0.000	0.100	0.000	0.004
A2	0.900	1.050	0.035	0.041
b	0.300	0.500	0.012	0.020
c	0.080	0.150	0.003	0.006
D	2.800	3.000	0.110	0.118
E	1.200	1.400	0.047	0.055
E1	2.250	2.550	0.089	0.100
e	0.950 TYP.		0.037 TYP.	
e1	1.800	2.000	0.071	0.079
L	0.550 REF.		0.022 REF.	
L1	0.300	0.500	0.012	0.020
θ	0°	8°	0°	8°